© Copyright - Peikert + RRM Design Group

Jardin de las Rosas

View from Intersection of Haley & Salsipuedes - for Reference Only

Project Data

Owner:	People's Self-Help Housing
Project Description:	New building consisting of 40 affordable apartments, 46 car garage, and 3,400 sf community center with community room, administrative offices, classroom, and laundry facilities.
Address:	510 & 520 North Salsipuedes Street 601 East Haley Street
APNs:	031-222-018, -019, 021
Land Use Designation:	CM Commercial Manufacturing: Priority Housing Overlay (49-63 u/a)
Zoning:	Commercial Industrial/Medium High Residential (15-27 u/a)
Existing Use:	Vacant
Proposed Use:	Multifamily Residential
Grading:	Cut = +/- 300 CY Fill = +/- 1600 CY
Outdoor Living space:	Common Outdoor Living Space Method 11,146 SF Common Outdoor Space provided (27% of site)
Lot Area:	41,099 +/- S.F. (0.94 ac)
Proposed Density:	42.5 units/acre
Allowable Density:	63 units/acre
Setbacks:	Salsipuedes Street = 10'-0" min. Haley Street = 7'-0" min.
Parking Required:	1 Space per Unit: 40
Parking Provided:	1 Space per Unit (Assigned): 40 Guest Spaces (Unassigned): 6 Total: 46
Bike Parking Required:	1 Space per Unit: 40
Bike Parking Provided:	50

Sheet Index

General
G1.0 Cover Sheet
G1.2 Project Data & Code Compliance

Civil
C1.1 Preliminary Grading & Drainage Plan

Architectural
A1.10 Site & First Floor Plan
A2.10 First & Second Floor Plans - North
A2.11 First & Second Floor Plans - South
A2.12 Third Floor & Roof Plan - North
A2.13 Third Floor & Roof Plan - South
A2.14 Attic Ventilation Plan
A4.10 Exterior Elevations & Partial Sections
A4.20 Exterior Elevations & Partial Sections
A5.10 Exterior Elevations & Sections
A5.11 Building Sections
A8.10 Site Details
A8.20 Wall & Ceiling Assembly Details
A8.30 Exterior Details
A8.40 Roof Details
A8.50 Door & Window Details

Structural : ***Not Included with Submittal***
S-1.1 Structural Title Page
S-1.2 Structural Specifications
S-2.11 Foundation Plan
S-2.12 Foundation Plan
S-2.21 Lower Floor Framing Plan
S-2.22 Lower Floor Framing Plan
S-2.31 Upper Floor Framing Plan
S-2.32 Upper Floor Framing Plan
S-2.41 Roof Framing Plan
S-2.42 Roof Framing Plan
S-3.1 Structural Details
S-3.2 Structural Details
S-3.3 Structural Details
S-3.4 Structural Details
S-3.5 Structural Details

Mechanical : ***Not Included with Submittal***
M0.10 General Notes & Legends
M0.20 Equipment Shedule
M1.10 First Floor Plan - Section A
M1.20 First Floor Plan - Section B
M2.10 Second Floor - Section A
M2.20 Second Floor - Section B
M3.10 Third Floor - Section A
M3.20 Third Floor - Section B
M4.10 Roof Plan - Section A
M4.20 Roof Plan - Section B
M5.10 Unit Plans
M5.20 Unit Plans
M5.30 Enlarged Plans
M6.10 Details
M6.20 Details

Electrical : ***Not Included with Submittal***
E0.10 Symbols, Abbreviations & Sheet Index
E0.20 General Notes
E0.30 Single Line Diagrams
E0.40 Calculations & Schedules
E1.10 First Floor Plan - Section A
E1.20 First Floor Plan - Section B
E2.10 Second Floor - Section A
E2.20 Second Floor - Section B
E3.10 Third Floor - Section A
E3.20 Third Floor - Section B
E4.10 Roof Plan - Section A
E4.20 Roof Plan - Section B
E5.10 Unit Plans
E5.20 Unit Plans
E5.30 Enlarged Plans
E6.10 Details

Plumbing : ***Not Included with Submittal***
P0.10 General Notes & Legends
P0.20 Schedule and Calculations
P1.10 First Floor Plan - Section A
P1.20 First Floor Plan - Section B
P2.10 Second Floor - Section A
P2.20 Second Floor - Section B
P3.10 Third Floor - Section A
P3.20 Third Floor - Section B
P4.10 Roof Plan - Section A
P4.20 Roof Plan - Section B
P5.10 Unit Plans
P5.20 Unit Plans
P5.30 Enlarged Plans
P6.10 Details

Landscape
.L-1.0 Planting Plan
.L-2.0 Planting Plan
.L-3.0 Irrigation Plan
.L-4.0 Irrigation Details
.L-5.0 Planting Plan Trees - Vines & Groundcovers
H-1.0 Planting Plan Trees - Vines & Groundcovers
H-2.0 Planting Plan Trees - Vines & Groundcovers

peikert + rrmdesigngroup

10 E. Figueroa St., Suite 1
Santa Barbara, CA 93101

Tel: 805.963.8283
Fax: 805.963.8184
www.rrmdesign.com

Project Name:

Jardin de las Rosas

Haley & Salsipuedes St.
Santa Barbara, CA

Peoples' Self-Help Housing

Consultant:

Stamp:

PRELIMINARY
NOT FOR CONSTRUCTION

Review after Final 03.31.2014

Revisions:

Sheet Title:

Cover Sheet

Sheet No.:

G1.0

Fire Dept Preliminary Review Letter

City of Santa Barbara
Fire Department
www.SantaBarbaraCA.gov

Scott Hopkins A.I.A. LEED AP
Peikert Group Architects
10 East Figueroa St. Suite 1
Santa Barbara, CA 93101

May 9, 2013

Administration
Tel: 805.965.5284
Fax: 805.564.5730

Fire Prevention/ Public Education
Tel: 805.564.5702
Fax: 805.564.5715

121 W. Carrillo St.
Santa Barbara, CA
93101

Re: Proposed Fire Department Access

Dear Mr. Hopkins,

This letter is in regards to the proposed development at 510, 520 N. Salsipuedes and 601 E. Haley Streets. Per our two meetings and the attached site plan dated 5/9/13 I believe you have achieved the intent of the Fire Departments access standards. Please attach this letter with any formal submittals to the City for review or permit applications.

Please call me at (805) 564-5723 if you have any questions.

Sincerely,

Ryan DiGuilio
Fire Inspector II/Investigator
City Of Santa Barbara Fire Department

Vicinity Map

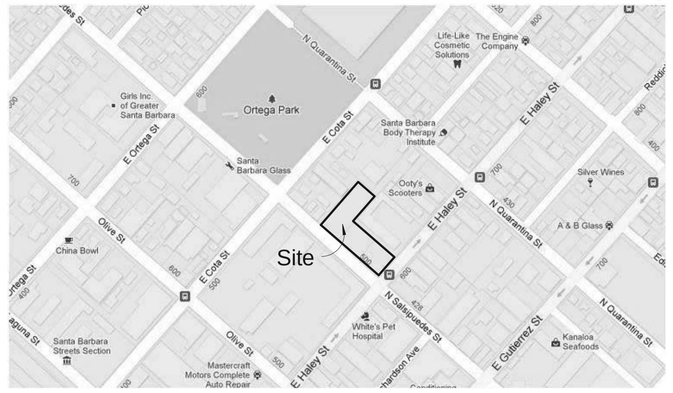

Unit Count

Unit Count			
Count	**Name**	**Comments**	**Rentable Area**
2	Unit 1A	1-Bedroom	630 SF
3	Unit 1B	1-Bedroom	646 SF
6	Unit 2A	2-Bedroom	833 SF
10	Unit 2B	2-Bedroom	844 SF
2	Unit 2C	2-Bedroom	833 SF
2	Unit 2D	2-Bedroom	935 SF
2	Unit 2E	2-Bedroom	851 SF
5	Unit 3A	3-Bedroom	1095 SF
4	Unit 3B	3-Bedroom	1127 SF
2	Unit 3C	3-Bedroom	1103 SF
2	Unit 3D	3-Bedroom	1123 SF
40			

Building Areas *See G1.2 for Net Areas*

Gross Building Area		
Level	**Name**	**Area**
Building		
Circulation		
Level 1	Circulation	1488 SF
Level 1	Elevator	79 SF
Level 2	Circulation	2799 SF
Level 3	Circulation	2714 SF
		7080 SF
Community Center		
Level 1	Assembly Room	1487 SF
Level 1	Community Center	1530 SF
Level 1	Laundry/Accessory	428 SF
		3445 SF
Garage		
Level 1	Bike Storage	880 SF
Level 1	Electrical	170 SF
Level 1	Elevator Equip.	75 SF
Level 1	Garage Storage	218 SF
Level 1	Parking Garage	14915 SF
Level 1	Trash Rm.	214 SF
		16472 SF
Residential		
Level 1	Residential Units	3715 SF
Level 2	Residential Units	17807 SF
Level 3	Residential Units	17727 SF
		39248 SF
		66245 SF

Gross Building Area		
Level	**Name**	**Area**
Built Open Space		
Plaza		
Level 1	4' Raised Court	4767 SF
Level 2	Podium Court	1375 SF
		6142 SF
		6142 SF
		72386 SF

Total Gross Building Area per Level	
Level	**Area**
Building	
Level 1	25198 SF
Level 2	20606 SF
Level 3	20441 SF
	66245 SF
Built Open Space	
Level 1	4767 SF
Level 2	1375 SF
	6142 SF
	72386 SF

Abbreviations

(E)	Existing	CT	Ceramic Tile	FURN	Furnish(ed)	MO	Masonry Opening	SF	Square Foot
(P)	Proposed	CTR	Center	GA	Gauge, Gage	MTL	Metal	SHT	Sheet
3D	3 Dimensional	DBL	Double	GALV	Galvanized	N	North	SHTHG	Sheathing
A/C	Air Conditioning	DF	Drinking Fountain	GB	Grab Bar	NIC	Not In Contract	SIM	Similar
ABV	Above	DIA	Diameter, Diaphragm	GC	General Contractor	No.	Number	SM	Sheet Metal
ACOUS	Acoustical	DIM	Dimension	GFCI	Ground Fault Circuit Interrupter	NOM	Nominal	SND	Sanitary Napkin Dispenser
ACT	Acoustical Ceiling Tile	DISP	Dispenser	GWB	Gypsum Wall Board	NTS	Not To Scale	SNR	Sanitary Napkin Receptacle
ADA	Americans with Disabilites Act	DN	Down	GYP	Gypsum	OC	On Center	SPEC	Specification(s)
ADJ	Adjacent	DR	Door	HB	Hose Bibb	OD	Overflow Drain	SQ	Square
AFCI	Arc Fault Circuit Interrupter	DS	Downspout	HC	Hollow Core	OPG	Opening	SS	Solid Surface
AFF	Above Finished Floor	DTL	Detail	HDW	Hardware	OPP	Opposite	SSTL	Stainless Steel
AL	Aluminum	DW	Dish Washer	HGT	Height	P	Pantry	STC	Sound Transmission Class
ALT	Alternate	DWG	Drawing	HM	Hollow Metal	PERF	Perforated	STL	Steel
ANCH	Anchor	E	East	HORIZ	Horizontal	PERP	Perpendicular	STOR	Storage
ANG	Angle	EA	Each	HVAC	Heating, Ventilation, A/C	PL	Plate, Property Line	STRUCT	Structural
ANOD	Anodized	EJ	Expansion Joint	HWD	Hardwood	PLAM	Plastic Laminate	SUSP	Suspended
AP	Access Panel	EL, ELEV	Elevation	ID	Inside Diameter	PLBG	Plumbing	SV	Sheet Vinyl
ARCH	Architect(ural)	ELEC	Electrical	IIC	Impact Insulation Class	PLF	Pounds per Linear Foot	SYM	Symmetrical
ASSOC	Associated	ENCL	Enclosure	IN	Inch	PLYWD	Plywood	T	Tread
BD	Board	EQ	Equal	INCAND	Incandescent	PNL	Panel	T&G	Tongue & Groove
BDRM	Bedroom	EQUIP	Equipment	INSUL	Insulation, Insulated	PP	Power Poll	TB	Towel Bar
BIT	Bituminous	EXH	Exhaust	INT	Interior	PR	Pair	TEL	Telephone
BL	Building Line	EXP	Expansion	JB	Junction Box	PROJ	Project	TEMP	Tempered
BLDG	Building	EXT	Exterior	JC	Janitor's Closet	PRTN	Partition	TJI	Truss Joist I-Joist
BLKG	Blocking	FACP	Fire Alarm Control Panel	JT	Joint	PSF	Pounds per Square Foot	TOS	Top of Slab
BM	Beam, Bench Mark	FAU	Forced Air Unit	KPL	Kickplate	PSI	Pounds per Square Inch	TOW	Top of Wall
BOT	Bottom	FAWP	Fluid Applied Waterproofing	LAM	Laminated	PSL	Parallel Strand Lumber	TPD	Toilet Paper Dispenser
BSMT	Basement	FD	Floor Drain	LAV	Lavatory	PT	Point, Presure Treated	TRANS	Transformer
BUR	Built-Up Roofing	FDC	Fire Department Connection	LBS	Pounds	PTD	Paper Towel Dispenser	TV	Television
BW	Both Ways	FDN	Foundation	LEED	Leadership in Energy & Environmental Design	PTR	Paper Towel Receptacle	TYP	Typical
CB	Catch Basin	FEC	Fire Extinguisher Cabinet	LF	Linear Feet	PV	Photo Voltaic	UFAS	Uniform Federal Accessibilty Standards
CBC	California Building Code	FF	Finished Floor Elevation	LH	Left Hand	PVC	Polyvinyl Chloride	UG	Underground
CEM	Cement	FG	Finished Grade	LIN	Linen Closet	PVMT	Pavement	UNFIN	Unfinished
CFM	Cubic Feet Per Minute	FIN	Finish(ed)	LINO	Linoleum	PWDR	Powder Room	UNO	Unless Noted Otherwise
CH	Coat Hook	FIXT	Fixture	LT(G)	Light(ing)	QTY	Quantity	UV	Ultraviolet
CIP	Cast in Place	FL	Flow Line	LVL	Laminated Veneer Lumber	R	Radius, Riser	VCT	Vinyl Composition Tile
CJ	Control Joint	FLASH	Flashing	LW	Lightweight	RB	Rubber Base	W	West
CL	Center Line	FLUOR	Fluorescent	MAG	Magnetic	RCP	Reflected Ceiling Plan	W/	With
CLG	Ceiling	FO	Face of	MAS	Masonry	RD	Roof Drain	W/D	Washer Dryer
CLO	Closet	FOC	Face of Concrete	MAX	Maximum	REF	Refrigerator	W/O	Without
CLR	Clear	FOF	Face of Finish	MDF	Medium Density Fiberboard	RH	Right Hand	WC	Water Closet
CMU	Concrete Masonry Unit	FOIC	Furnished by Owner Installed by Contractor	MECH	Mechanical	RO	Rough Opening	WD	Wood
CO	Clean Out	FOM	Face of Masonry	MEMB	Membrane	S	South	WDW	Window
COL	Column	FOS	Face of Stud	MEP	Mechanical, Electrical, Plumbing	SA	Self Adhering, Supply Air	WH	Water Heater
CONC	Concrete	FPL	Fireplace	MFR	Manufacturer	SAWP	Self Adhering Waterproofing	WI	Wrought Iron
CONST	Construction	FRP	Fiberglass Reinforced Panels	MIN	Minimum	SC	Solid Core	WP	Waterproof(ing)
CONT	Continuous	FT	Foot, Feet	MIR	Mirror	SCD	Seat Cover Dispenser	WR	Weather Resistive
CONTR	Contractor	FTG	Footing	MISC	Miscellaneous	SCHED	Schedule	WT	Weight
CPT	Carpet					SD	Soap Dispenser	WWF	Welded Wire Fabric
						SECT	Section	YD	Yard

Project Team

Owner: Peoples' Self-Help Housing
3533 Empleo Street
San Luis Obispo, CA 93401
Tel: (805) 781-3088
Fax (805) 544-1901
Contact: Kenneth Trigueiro

Architect: Peikert + RRM Design Group
10 East Figueroa St., Suite 1
Santa Barbara, CA 93101
Tel: (805) 963-8283
Fax (805) 963-8184
Contact: Scott Hopkins

Landscape Architect: Robert A. Fowler Landscape Arch.
3757 State Street, Suite 210A
Santa Barbara, CA 93105
Tel: (805) 569-1806
Fax (805) 569-1860
Contact: Robert A. Fowler

Structural Engineer: Ashley & Vance Engineering, Inc.
860 Walnut St. Suite C
San Luis Obispo, CA 93401
Tel: (805) 545-0010
Contact: Truitt Vance

Civil Engineer & Survey: Penfield & Smith Engineers
101 E. Victoria St. (P.O. Box 98)
Santa Barbara, CA 93102
Tel: (805) 963-9532
Fax (805) 966-9801
Contact: Steve Wang

Mechanical Electrical Plumbing: Green MEP
3 MacArthur Place 8th floor #855
Santa Ana, CA 92707
Tel: (949) 232-1919
Contact: Bruce Entezam

Soils Engineer: Pacific Materials Lab
35-A South la Patera Land
P.O. Box 96
Goleta, CA 93116
Tel: (805) 964-6901
Fax (805) 964-6239
Contact: Ronald J. Pike

Applicable Codes

2013 California Building Code
2013 California Plumbing Code
2013 California Electrical Code
2013 California Fire Code
2010 California Energy Code
2010 California Administration Code
2013 California Referenced Standards Code
Fair Housing Law
2010 ADA Standards for Accessible Design

Symbols Legend

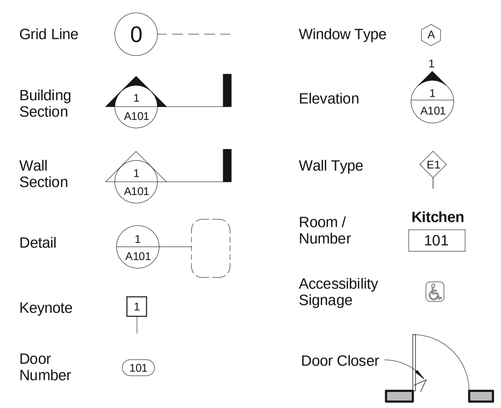

© Copyright - Peikert + RRM Design Group

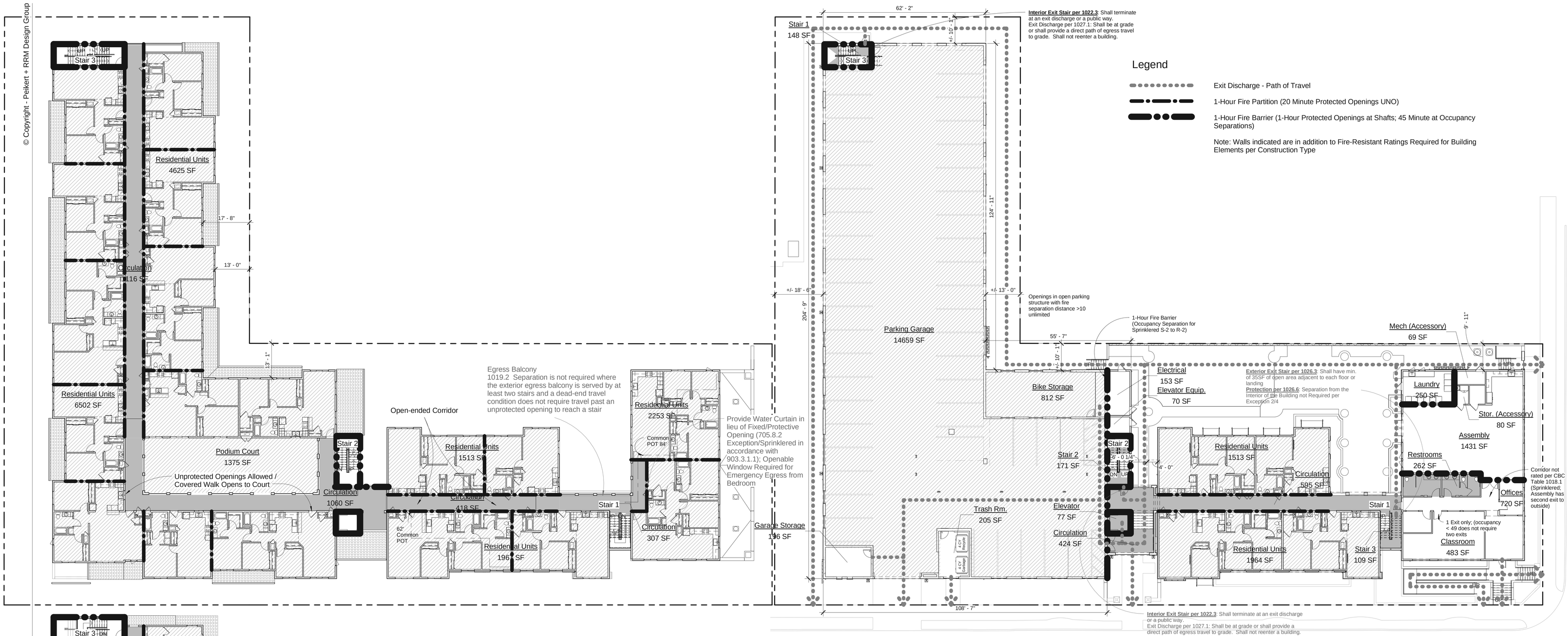

1 Level 1
SCALE: 1/16" = 1'-0"

2 Level 2
SCALE: 1/16" = 1'-0"

3 Level 3
SCALE: 1/16" = 1'-0"

Legend

- Exit Discharge - Path of Travel
- 1-Hour Fire Partition (20 Minute Protected Openings UNO)
- 1-Hour Fire Barrier (1-Hour Protected Openings at Shafts; 45 Minute at Occupancy Separations)

Note: Walls indicated are in addition to Fire-Resistant Ratings Required for Building Elements per Construction Type

Area Schedule (Building Floor Area)			
Occupancy Type	**Area**	**Occ. Factor**	**Occ. Load**
Level 1			
A - Assembly			
Assembly	1431 SF	15	95
Mech (Accessory)	69 SF	300	0
Stor. (Accessory)	80 SF	300	0
	1581 SF		96
B - Business			
Classroom	483 SF	20	24
Offices	720 SF	100	7
Restrooms	262 SF	0	0
	1466 SF		31
R-2 - Residential			
Circulation	1020 SF	0	0
Elevator	77 SF	0	0
Laundry	250 SF	100	3
Residential Units	3477 SF	200	17
Stair 1	148 SF	0	0
Stair 2	171 SF	0	0
Stair 3	109 SF	0	0
	5252 SF		20
S-2 Garage			
Bike Storage	812 SF	200	4
Electrical	153 SF	300	1
Elevator Equip.	70 SF	300	0
Garage Storage	196 SF	300	1
Parking Garage	14659 SF	200	73
Trash Rm.	205 SF	300	1
	16096 SF		79
	24394 SF		227
Level 2			
R-2 - Residential			
Circulation	2900 SF	0	0
Podium Court	1375 SF	200	7
Residential Units	16861 SF	200	84
	21136 SF		91
	21136 SF		91
Level 3			
R-2 - Residential			
Circulation	2849 SF	0	0
Residential Units	16847 SF	200	84
	19696 SF		84
	19696 SF		84
	65226 SF		402

BLDG CODE COMPLIANCE

Open Parking Garage

The Open Parking Garage shall be of Type II construction [CBC 406.5.1]

Openings shall provide Natural Ventilation - see area takeoffs G1.3 demonstrating min 20% opening area and min. 40% aggregate length. [CBC 406.5.2]

Mixed uses shall be allowed in the same building as an open parking garage. [CBC 406.5.3]

Occupancy, Construction Type, Allowable Heights & Areas

TYPE IIB (Non-combustible materials)
Garage Group S-2: Open Parking Garage
Allowed: 3 Stories/26,000 SF
Proposed: 1 Story/See Area Table

TYPE V-A (1-Hour Fire-Resistance Rating) [Table 503]
Residential Group R-2 (Apartment House):
Allowed: 3 Stories/12,000 SF*
Proposed: 3 Stories/See Area Table

Business Group B (Offices & Classroom - non academic):
Allowed: 3 Stories/18,000 SF*
Proposed: 1 Story/See Area Table

Assembly Group A-3 (Community hall)
Allowed: 2 Stories/11,500 SF*
Proposed: 1 Story/See Area Table

***Building Area Modifications**

Frontage Increase [CBC 506.2]
Note: Building is Eligible for 34% Increase based Frontage Increase Calculation of Perimeter on a >20' Public Way or Open Space; however additional allowance is not needed due to Sprinkler Increase

Automatic Sprinkler System Increase = 200% for buildings equipped throughout with an approved automatic sprinkler system in accordance with Section 903.3.1.1

Mixed Use - Separated Occupancies

Separated Occupancies shall be individually classified and comply with CBC based on the occupancy of that portion of the building. [508.4.1]

The Building Area shall be such that the sum of the ratios of the actual building area of each separated occupancy divided by the allowable building area of each separated occupancy shall not exceed 1:

Sum of Ratios (Sprinkler Increase Included except at A occupancy):

Level 1, S-2 + R-2 + B + A-3
16,096/78,000 + 5,252/36,000 + 1,466/54,000 + 1,581/11,500 = 0.52 < 1

Level 2, R-2:
21,042 Proposed < 36,000 Max Allowed

Level 3, R-2:
19,696 Proposed < 36,000 Max Allowed

Occupancy Separations:

Individual Occupancies shall be separated in accordance with Table 508.4 (Sprinklered in accordance with Section 903.3.1.1):
R-2 (Res) to S-2 (Garage) = 1 Hour
R-2 (Res) to A and B = 1 Hour
A to B = 1 Hour

peikert + rrmdesigngroup
10 E. Figueroa St., Suite 1
Santa Barbara, CA 93101
Tel: 805.963.8283
Fax: 805.963.8184
www.rrmdesign.com

Project Name:

Jardin de las Rosas

Haley & Salsipuedes St.
Santa Barbara, CA

Peoples' Self-Help Housing

Consultant:

Stamp:
PRELIMINARY NOT FOR CONSTRUCTION

Review after Final 03.31.2014

Revisions:

Sheet Title:
Project Data & Code Compliance

Sheet No.:
G1.2

3/31/2014 9:00:57 PM C:\Users\besangster\Documents\PSHH - Salsipuedes Central_besangster.rvt

© Copyright - Peikert + RRM Design Group

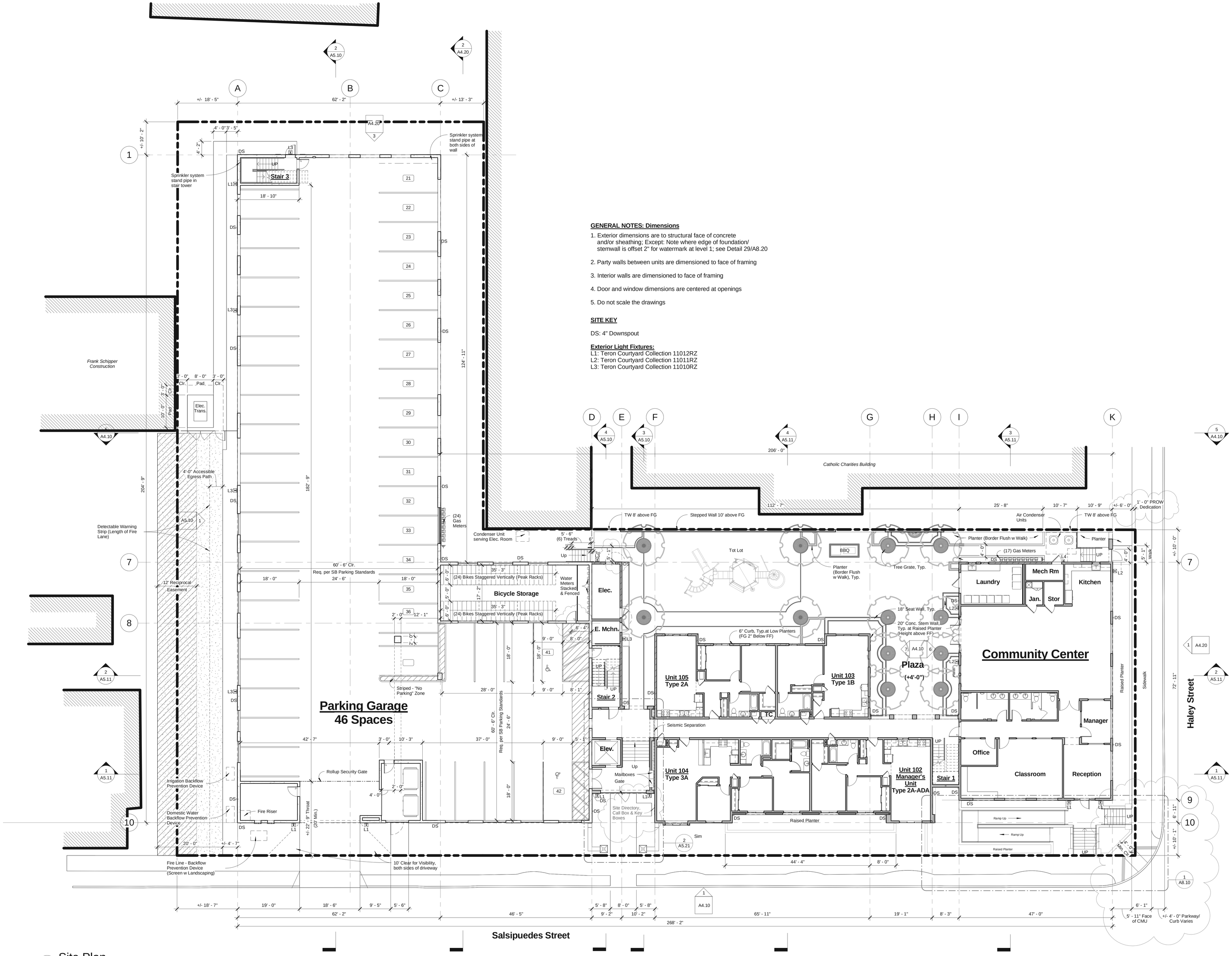

1 Site Plan
SCALE: 3/32" = 1'-0"

GENERAL NOTES: Dimensions

1. Exterior dimensions are to structural face of concrete and/or sheathing; Except: Note where edge of foundation/ stemwall is offset 2" for watermark at level 1; see Detail 29/A8.20
2. Party walls between units are dimensioned to face of framing
3. Interior walls are dimensioned to face of framing
4. Door and window dimensions are centered at openings
5. Do not scale the drawings

SITE KEY

DS: 4" Downspout

Exterior Light Fixtures:
L1: Teron Courtyard Collection 11012RZ
L2: Teron Courtyard Collection 11011RZ
L3: Teron Courtyard Collection 11010RZ

peikert + rrmdesigngroup

10 E. Figueroa St., Suite 1
Santa Barbara, CA 93101

Tel: 805.963.8283
Fax: 805.963.8184
www.rrmdesign.com

Project Name:

Jardin de las Rosas

Haley & Salsipuedes St.
Santa Barbara, CA

Peoples' Self-Help Housing

Consultant:

Stamp:

PRELIMINARY
NOT FOR CONSTRUCTION

Review after Final 03.31.2014

Revisions:

1	Revision 1	Date 1

Sheet Title:

Site & First Floor Plan

Sheet No.:

A1.10

© Copyright - Peikert + RRM Design Group

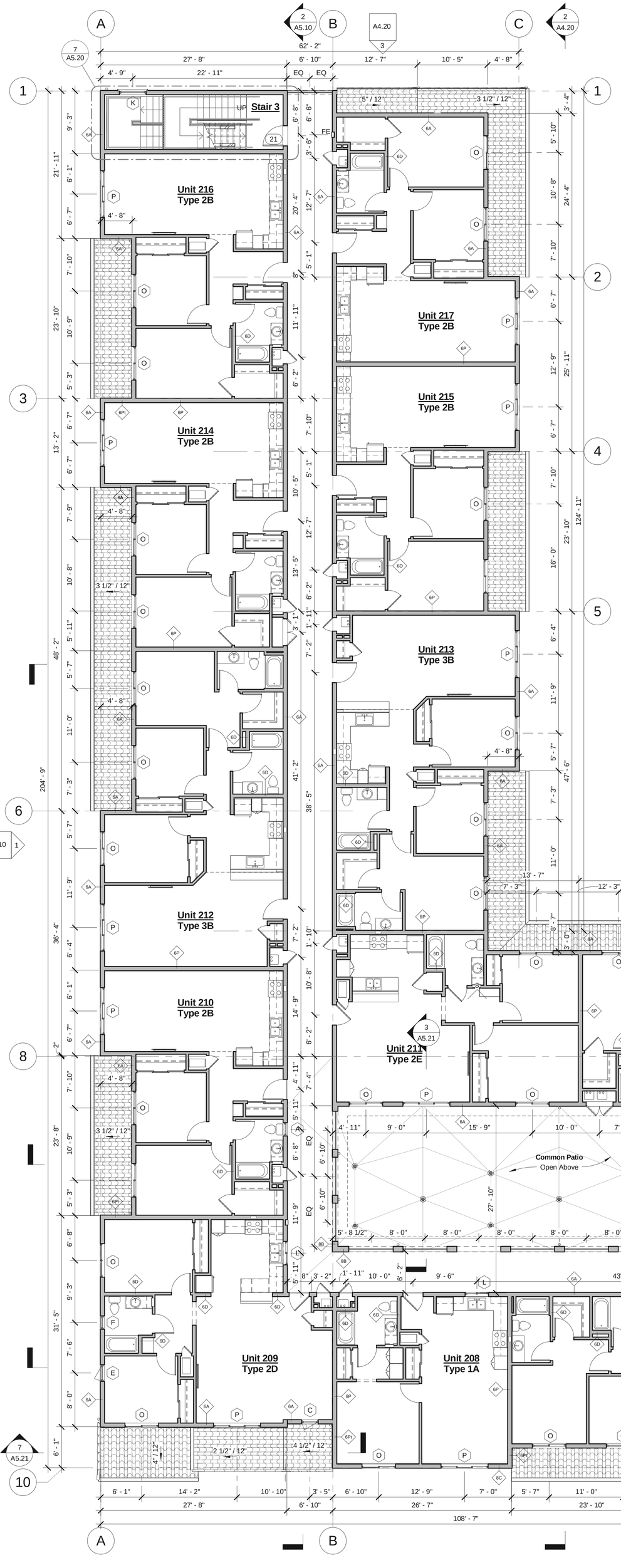

2 Second Floor Plan - North
SCALE: 1/8" = 1'-0"

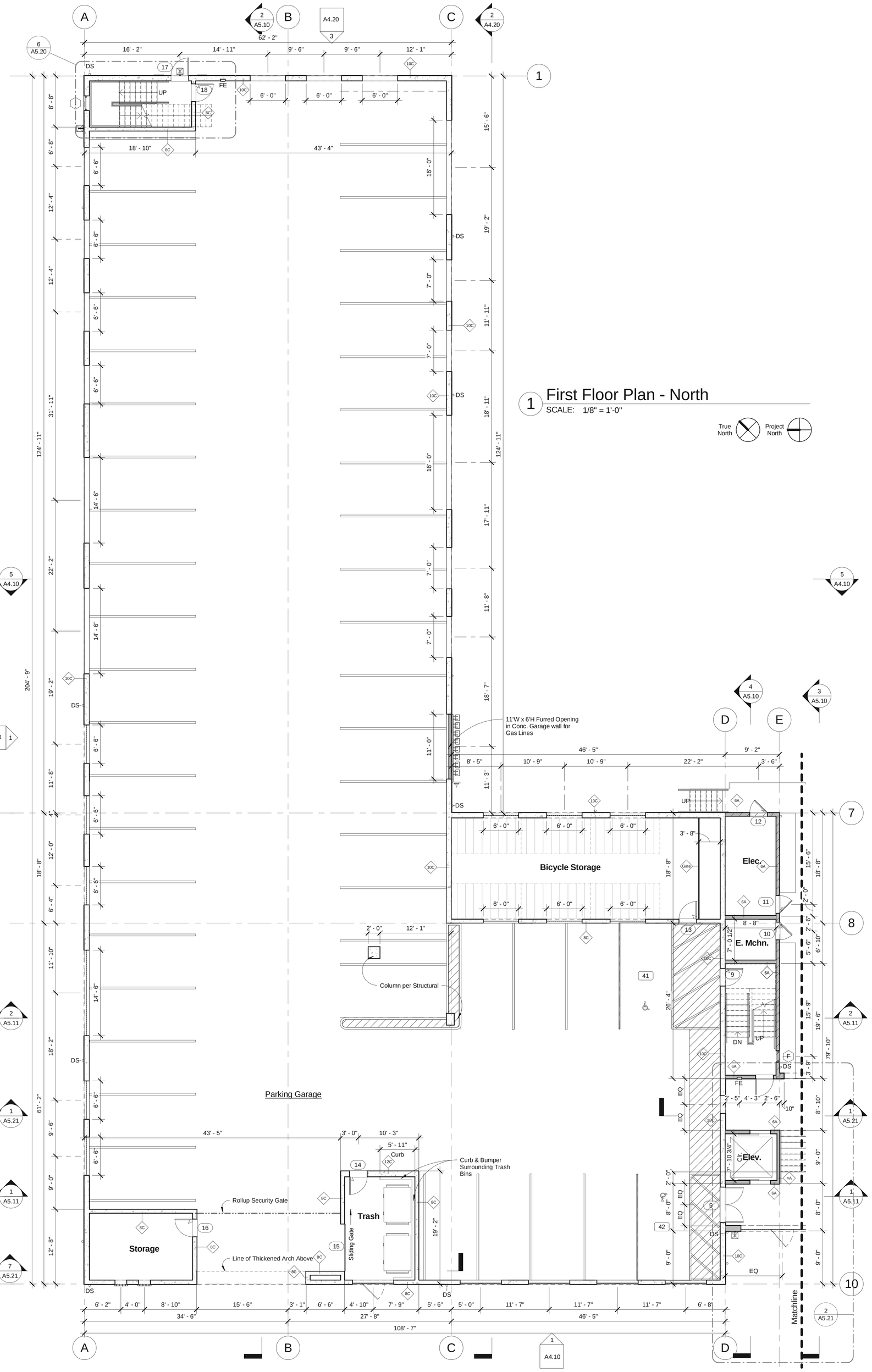

1 First Floor Plan - North
SCALE: 1/8" = 1'-0"

peikert + rrmdesigngroup

10 E. Figueroa St., Suite 1
Santa Barbara, CA 93101

Tel: 805.963.8283
Fax: 805.963.8184
www.rrmdesign.com

Project Name:

Jardin de las Rosas

Haley & Salsipuedes St.
Santa Barbara, CA

Peoples' Self-Help Housing

Consultant:

Stamp:

PRELIMINARY
NOT FOR CONSTRUCTION

Review after Final	03.31.2014

Revisions:

Sheet Title:

First & Second Floor Plans - North

Sheet No.:

A2.10

3/31/2014 8:46:47 PM C:\Users\besangster\Documents\PSHH - Salsipuedes Central_besangster.rvt

© Copyright - Peikert + RRM Design Group

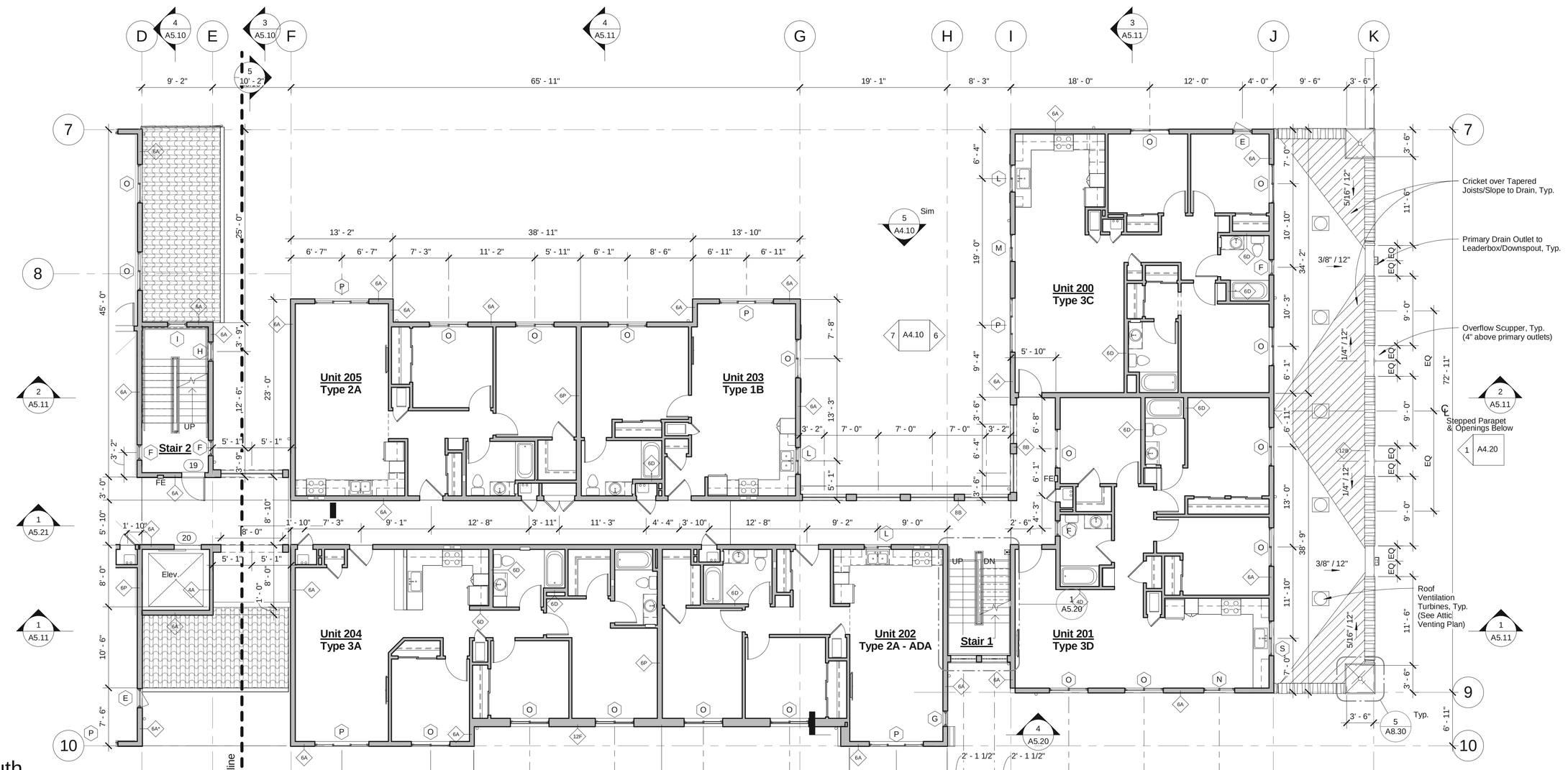

1 Second Floor Plan - South
SCALE: 1/8" = 1'-0"

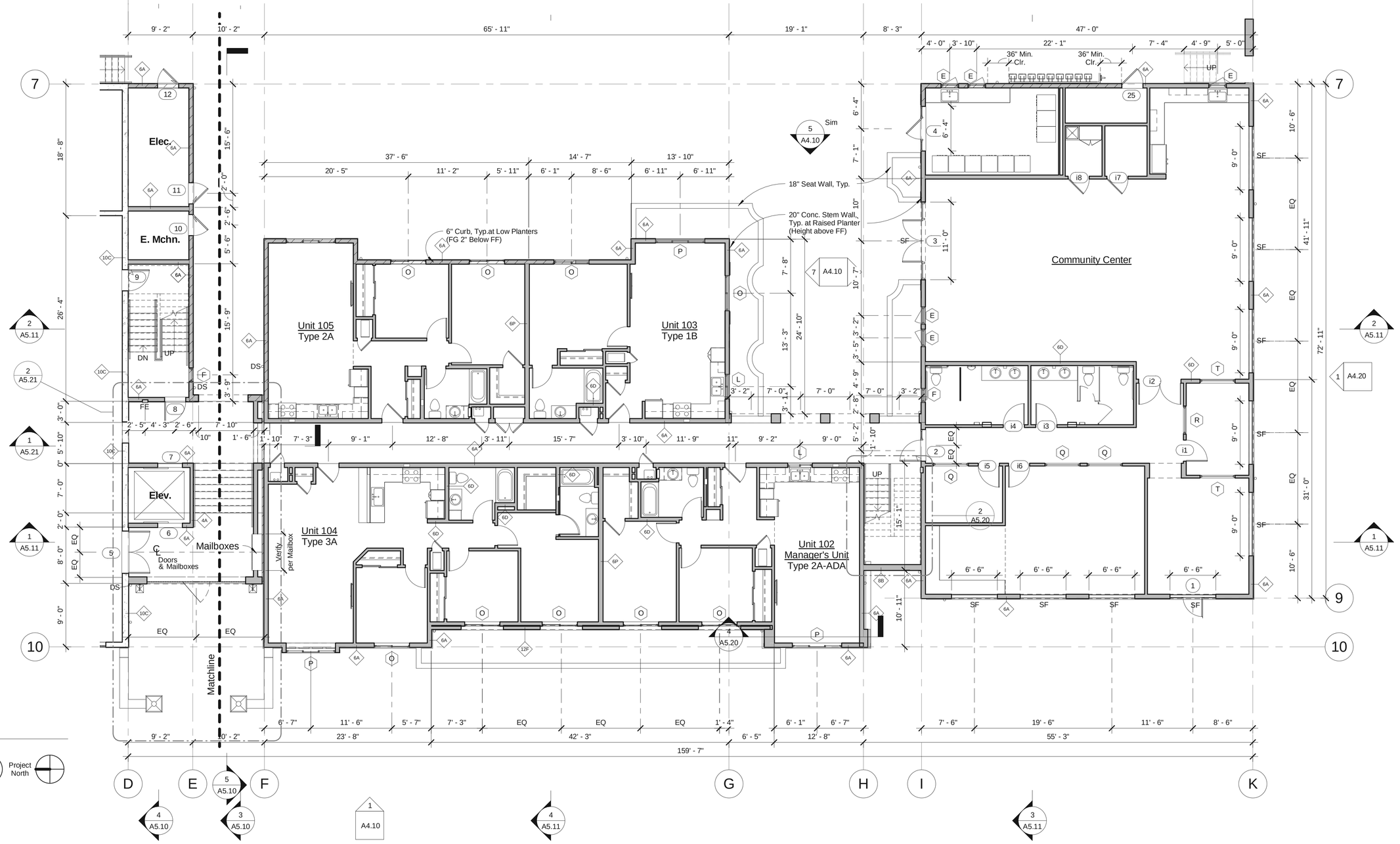

2 First Floor Plan - South
SCALE: 1/8" = 1'-0"

peikert + rrmdesigngroup
10 E. Figueroa St., Suite 1
Santa Barbara, CA 93101
Tel: 805.963.8283
Fax: 805.963.8184
www.rrmdesign.com

Project Name:

Jardin de las Rosas

Haley & Salsipuedes St.
Santa Barbara, CA

Peoples' Self-Help Housing

Consultant:

Stamp:
PRELIMINARY NOT FOR CONSTRUCTION

Review after Final 03.31.2014

Revisions:

Sheet Title:
First & Second Floor Plans - South

Sheet No.:
A2.11

© Copyright - Peikert + RRM Design Group

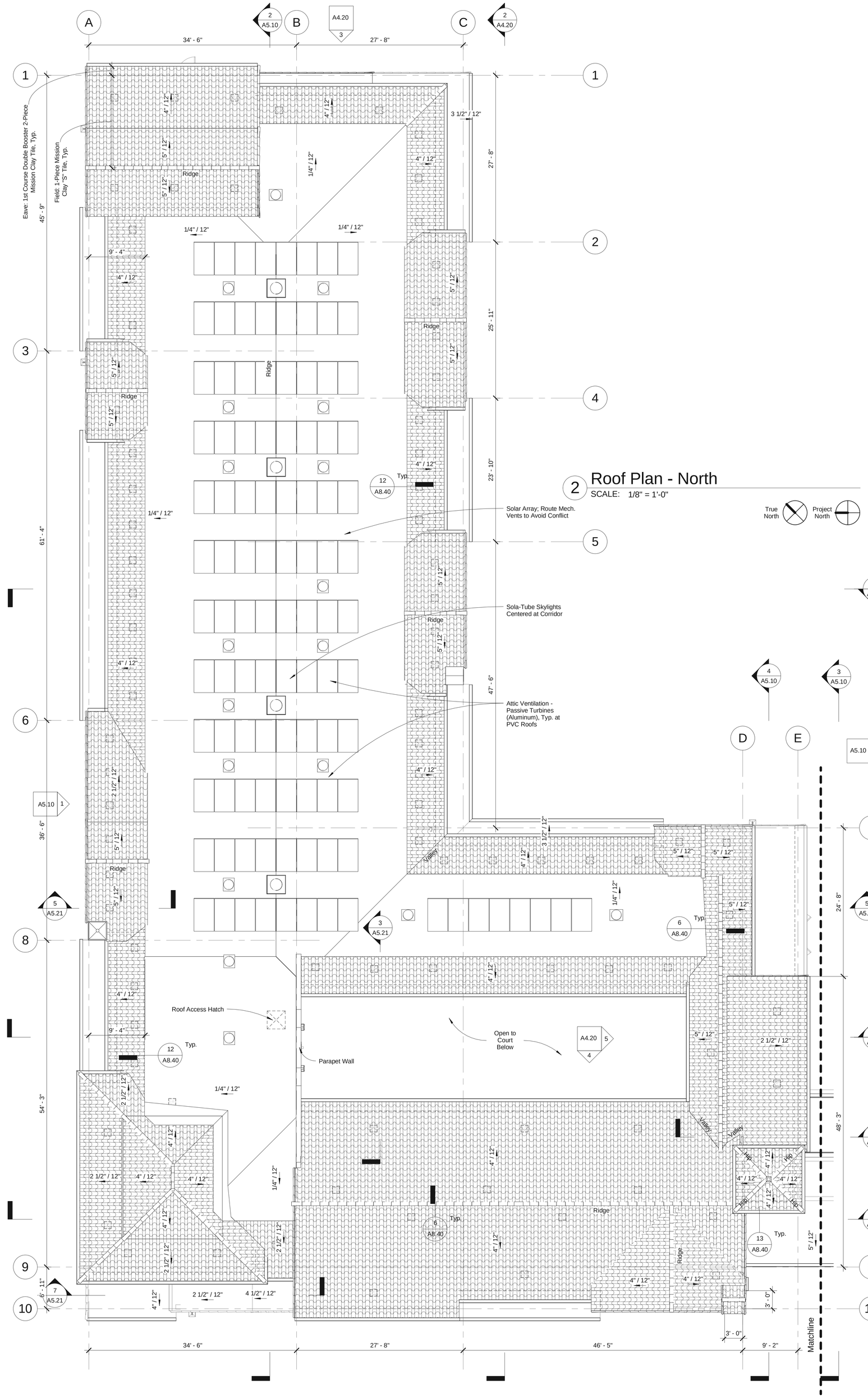

2 Roof Plan - North
SCALE: 1/8" = 1'-0"

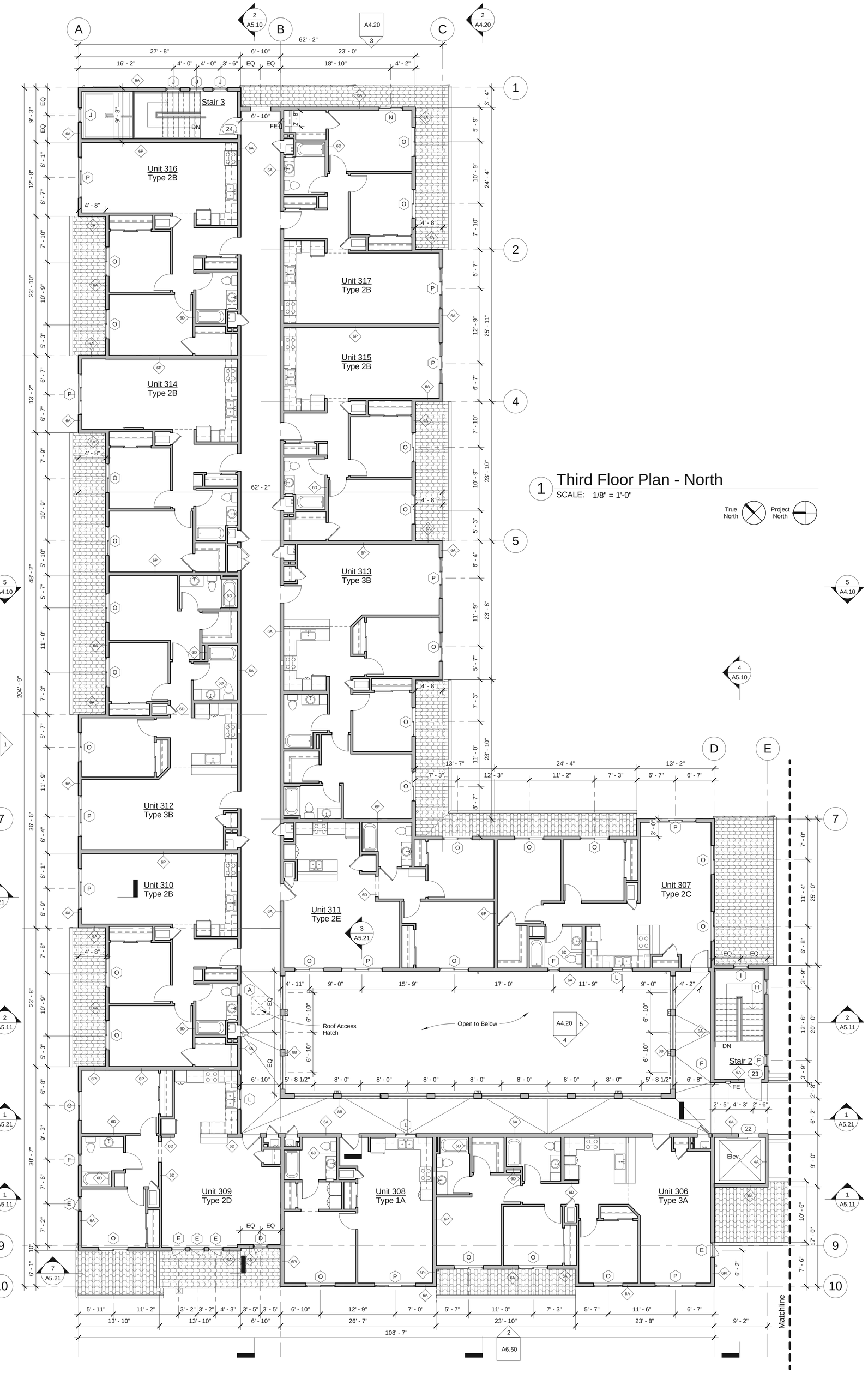

1 Third Floor Plan - North
SCALE: 1/8" = 1'-0"

peikert + rrmdesigngroup

10 E. Figueroa St., Suite 1
Santa Barbara, CA 93101

Tel: 805.963.8283
Fax: 805.963.8184
www.rrmdesign.com

Project Name:

Jardin de las Rosas

Haley & Salsipuedes St.
Santa Barbara, CA

Peoples' Self-Help Housing

Consultant:

Stamp:

PRELIMINARY
NOT FOR CONSTRUCTION

Review after Final 03.31.2014

Revisions:

Sheet Title:

Third Floor & Roof Plan - North

Sheet No.:

A2.12

3/31/2014 8:47:01 PM C:\Users\besangster\Documents\PSHH - Salsipuedes Central_besangster.rvt

© Copyright - Peikert + RRM Design Group

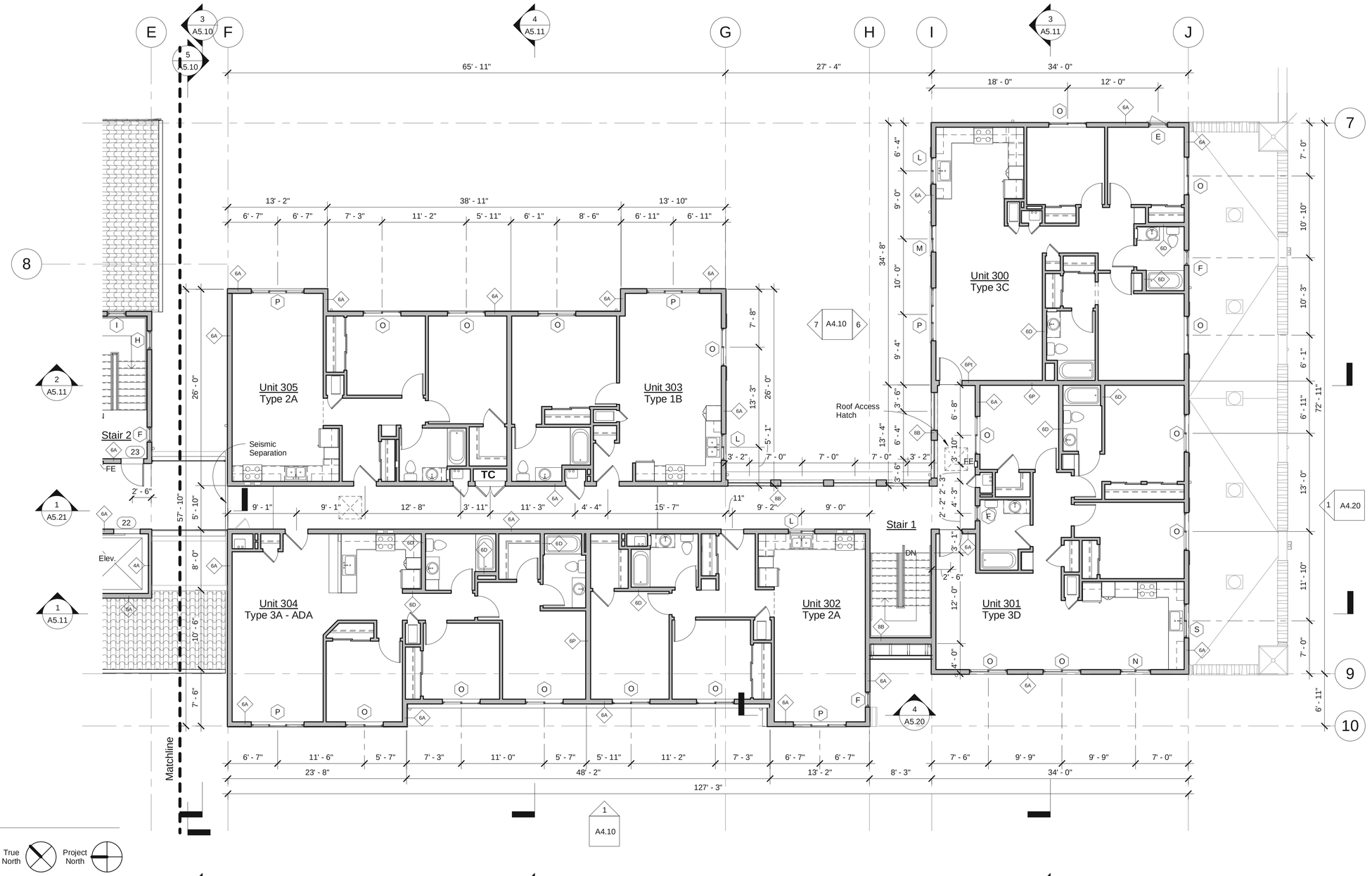

1 Third Floor Plan - South
SCALE: 1/8" = 1'-0"

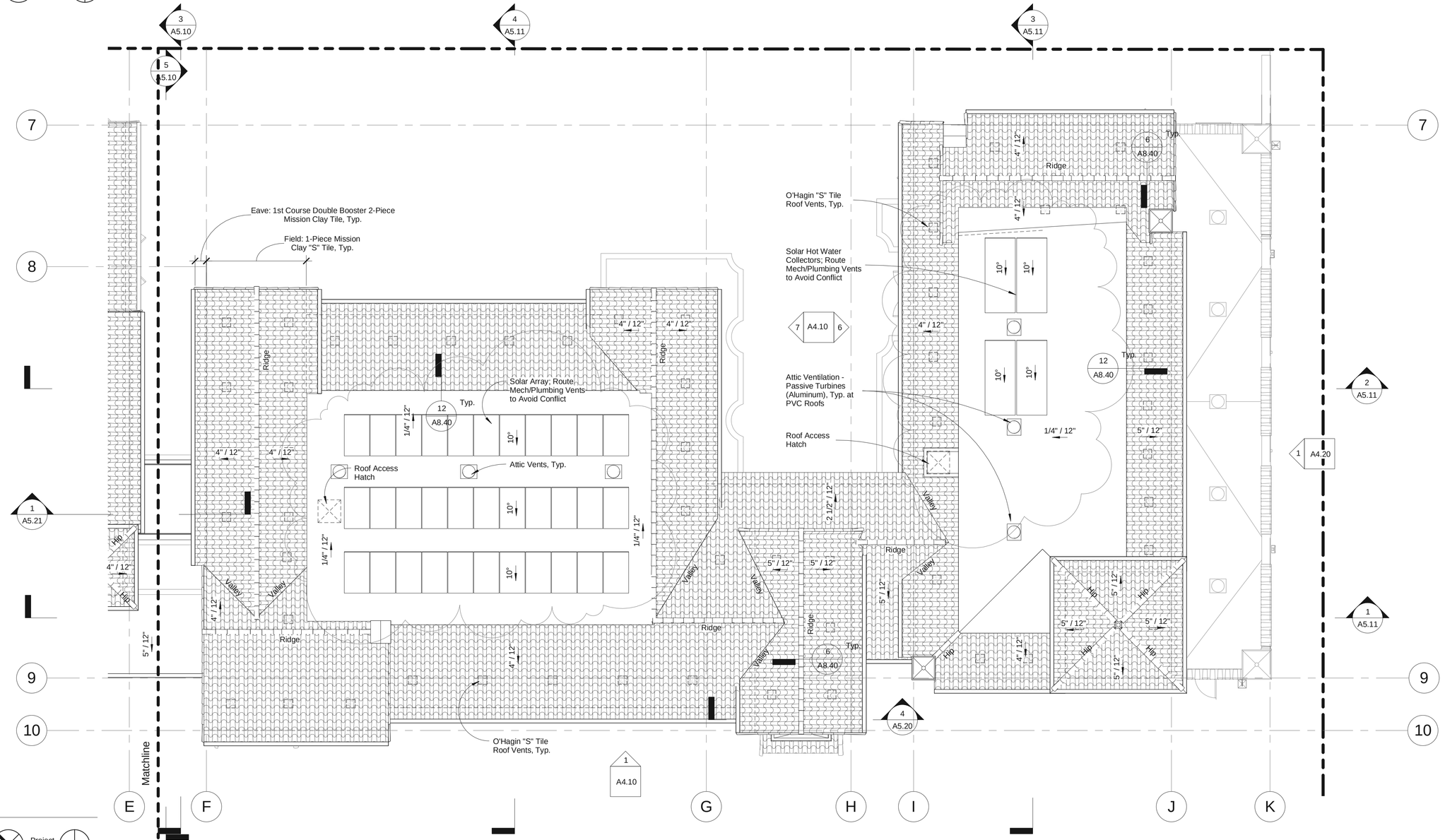

2 Roof Plan - South
SCALE: 1/8" = 1'-0"

peikert + rrmdesigngroup

10 E. Figueroa St., Suite 1
Santa Barbara, CA 93101

Tel: 805.963.8283
Fax: 805.963.8184
www.rrmdesign.com

Project Name:

Jardin de las Rosas

Haley & Salsipuedes St.
Santa Barbara, CA

Peoples' Self-Help Housing

Consultant:

Stamp:

PRELIMINARY
NOT FOR CONSTRUCTION

Review after Final	03.31.2014

Revisions:

1	Revision 1	Date 1

Sheet Title:

Third Floor & Roof Plan - South

Sheet No.:

A2.13

3/31/2014 8:47:07 PM C:\Users\besangster\Documents\PSHH - Salsipuedes Central_besangster.rvt

© Copyright - Peikert + RRM Design Group

1 Roof
SCALE: 3/32" = 1'-0"

Attic Ventilation Schedule

Attic Zone	Area	Factor	Min. NFVA Required
Zone 1	357 SF	150	2.38 SF
Zone 2	756 SF	150	5.04 SF
Zone 3	1070 SF	150	7.13 SF
Zone 4	177 SF	150	1.18 SF
Zone 5	1628 SF	150	10.86 SF
Zone 6	2256 SF	150	15.04 SF
Zone 7*	1420 SF	300	4.73 SF
Zone 8*	806 SF	300	2.69 SF
Zone 9	1044 SF	150	6.96 SF
Zone 9.5	1182 SF	150	7.88 SF
Zone 10**	72 SF	24	3.00 SF
Zone 11	594 SF	150	3.96 SF
Zone 12	644 SF	150	4.30 SF
Zone 13	886 SF	150	5.91 SF
Zone 14	2666 SF	150	17.77 SF
Zone 15	2014 SF	150	13.43 SF
Zone 16	1693 SF	150	11.29 SF
Zone 17	559 SF	150	3.73 SF
Zone 18	934 SF	150	6.22 SF

Attic Zone	Count	Vent Type	NFVA Provided
Zone 1	4	S-Tile O'Hagin	2.71 SF
	4		2.71 SF
Zone 2	1	Aura Turbine	1.39 SF
Zone 2	7	S-Tile O'Hagin	4.74 SF
	8		6.13 SF
Zone 3	2	Aura Turbine	2.78 SF
Zone 3	8	S-Tile O'Hagin	5.42 SF
	10		8.20 SF
Zone 4	2	S-Tile O'Hagin	1.35 SF
	2		1.35 SF
Zone 5	1	Aura Turbine	1.39 SF
Zone 5	15	S-Tile O'Hagin	10.16 SF
	16		11.55 SF
Zone 6	2	Aura Turbine	2.78 SF
Zone 6	19	S-Tile O'Hagin	12.86 SF
	21		15.64 SF
Zone 7*	8	S-Tile O'Hagin	5.42 SF
	8		5.42 SF
Zone 8*	4	S-Tile O'Hagin	2.71 SF
	4		2.71 SF
Zone 9	11	S-Tile O'Hagin	7.45 SF
	11		7.45 SF
Zone 9.5	3	Aura Turbine	4.17 SF
Zone 9.5	6	S-Tile O'Hagin	4.06 SF
	9		8.23 SF
Zone 11	6	S-Tile O'Hagin	4.06 SF
	6		4.06 SF
Zone 12	1	Aura Turbine	1.39 SF
Zone 12	6	S-Tile O'Hagin	4.06 SF
	7		5.45 SF
Zone 13	1	Aura Turbine	1.39 SF
Zone 13	7	S-Tile O'Hagin	4.74 SF
	8		6.13 SF
Zone 14	6	Aura Turbine	8.34 SF
Zone 14	16	S-Tile O'Hagin	10.83 SF
	22		19.17 SF
Zone 15	4	Aura Turbine	5.56 SF
Zone 15	12	S-Tile O'Hagin	8.13 SF
	16		13.69 SF
Zone 16	3	Aura Turbine	4.17 SF
Zone 16	11	S-Tile O'Hagin	7.45 SF
	14		11.62 SF
Zone 17	6	S-Tile O'Hagin	4.06 SF
	6		4.06 SF
Zone 18	5	Aura Turbine	6.95 SF
	5		6.95 SF

Notes:

1. Number & Size of Vents Provided Based on Required Net Free Vent Area Calculation:
Min NFVA = Attic Area / 150, Typ.

*Exception where Vents are positioned High/Low with 3' Vertical Separation:
Min NFVA = Attic Area / 300

**Exception at Elevator Tower:
Min. NFVA = 3.5% Hoistway Area or no less than 3 SF (CBC 3004.3): Provided at Louvered Vents in Sidewalls

2. Per CBC 718.4.2 Draftstopping in Attics
In occupancies in Group R-2 that do not exceed four stories above grade plane, the attic space shall be subdivided into areas not exceeding 3,000 SF or above every two dwelling units, whichever is smaller.

3. Where Shear is Required along Corridors, provide Open Block Trusses for Cross Circulation within Attic Zones

Attic Ventilation Key

- Roof/Attic Areas with 3 to 5:12 Pitch; S-Tile
- Roof/Attic Areas with 1/4:12 Pitch; PVC Membrane
- O'Hagin S-Tile Vents provides 0.68 SF NFVA Each
- Aura Vent AV-16-C4 provides 1.39 SF NFVA Each (20" Outside Diameter, 8" Height + 4" Collar with Curb Mounted Flange 22"x22"x2" over 6" curb)
- Shear Wall/Draftstop cont. to Roof Sheathing (Verify per Structural)

peikert + rrmdesigngroup
10 E. Figueroa St., Suite 1
Santa Barbara, CA 93101
Tel: 805.963.8283
Fax: 805.963.8184
www.rrmdesign.com

Project Name:
Jardin de las Rosas
Haley & Salsipuedes St.
Santa Barbara, CA
Peoples' Self-Help Housing

Consultant:

Stamp:
PRELIMINARY
NOT FOR CONSTRUCTION

Review after Final 03.31.2014
Revisions:

Sheet Title:
Attic Ventilation Plan

Sheet No.:
A2.14

© Copyright - Peikert + RRM Design Group

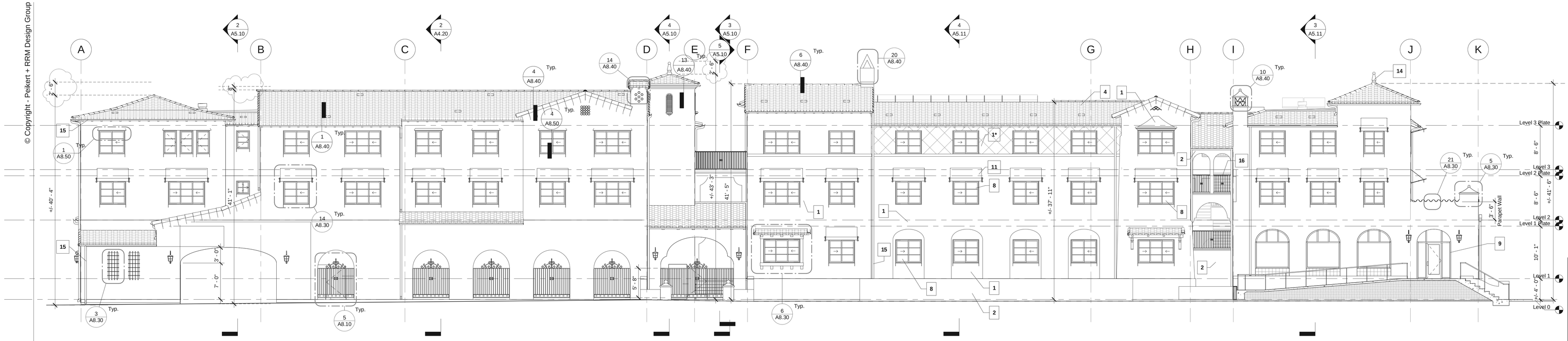

1 Salsipuedes Street - West Elevation
SCALE: 1/8" = 1'-0"

5 East Elevation & North Wing Section
SCALE: 1/8" = 1'-0"

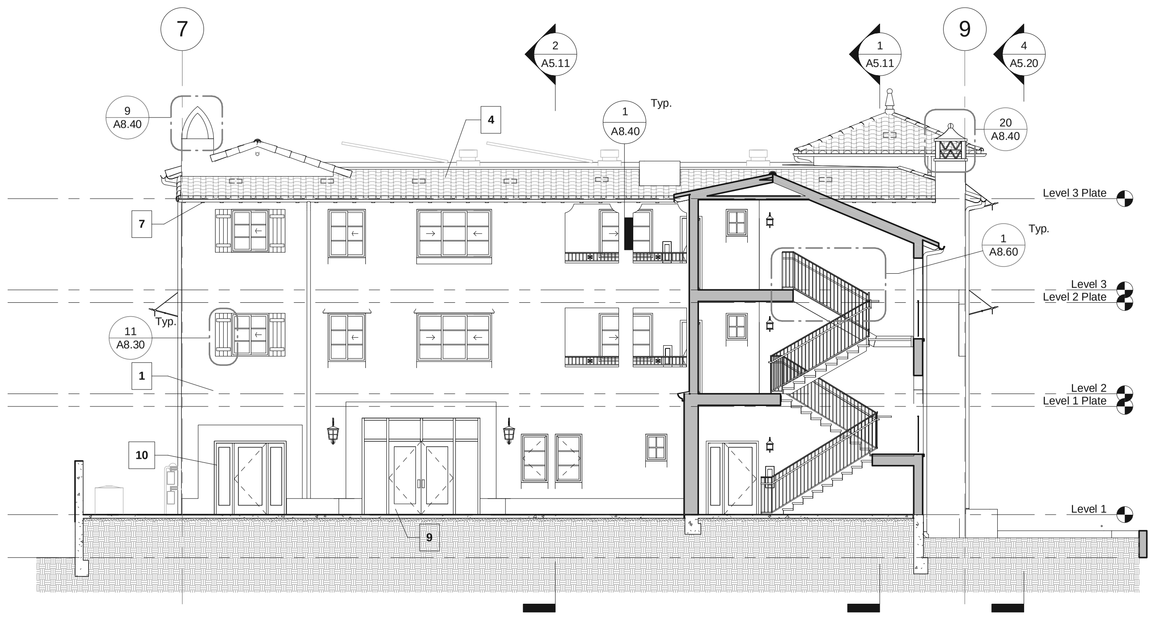

6 Courtyard - South Elevation & Partial Section
SCALE: 1/8" = 1'-0"

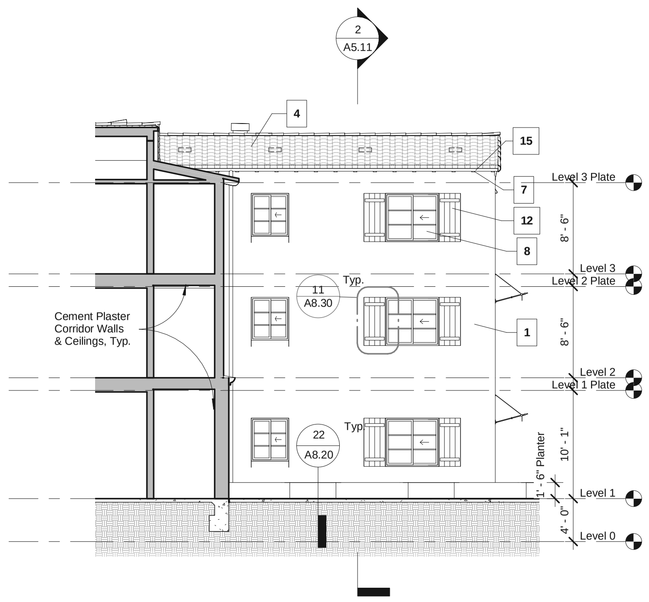

7 Courtyard - North Elevation
SCALE: 1/8" = 1'-0"

Exterior Materials Schedule

Keynote	Description	Material/Manufacturer/Model	Texture/Finish	Color
1	Exterior Finish 1	Cement Plaster - La Habra Integral Color	20/30 Sand Float	Pure Ivory X-53
1*	Exterior Finish 1 w/ Diamond Score Lines	Cement Plaster - La Habra Integral Color	20/30 Sand Float	Pure Ivory X-53
2	Exterior Finish 2	Cement Plaster - La Habra Integral Color	20/30 Sand Float	Clay X-830
4	Roof - Field Tile	Boral/US Tile Clay - S Tile		Carmel Blend
5	Eave, Ridge, Wall Cap	Boral/US Tile Clay - Barrel Tile		Carmel Blend
6	Roof - Single Ply Membrane	PVC		White
7	Exterior Woodwork, Rafter Tails	Sikkens - Rubbol Solid Body		Chestnut Brown
8	Window	Milgard Vinyl	Integral	Espresso
9	Store Front System	Kawneer Aluminum	Anodized	Medium Bronze
10	Exterior Entry Door	Varies - per Schedule		
11	Awning	Sunbrella		Mixed
12	Shutter	Vinyl	B&B Style - Plank	Federal Brown
13	Decorative Tile	Original Mission Tile - Cement		Multi
14	Decorative Finial	Stone		
15	Gutter/Downspout	Senox Seamless Aluminum	Factory Baked	Musket Brown
16	Light Fixture, Exterior Sconce	Metal/Glass		
17	Waterproof Deck/Traffic Topping	Mer-Ko Acrlic Topcoat		Sand Dune

Notes

1. Submit Physical Samples of all Finish Colors & Textures for verification prior to order.
2. Exterior Light Fixtures mounted over walking surfaces shall have max. depth of 4" where height is lower than 6'8". (CBC 1003.3.3 Horizontal projections)

peikert + rrmdesigngroup

10 E. Figueroa St., Suite 1
Santa Barbara, CA 93101

Tel: 805.963.8283
Fax: 805.963.8184
www.rrmdesign.com

Project Name:

Jardin de las Rosas

Haley & Salsipuedes St.
Santa Barbara, CA

Peoples' Self-Help Housing

Consultant:

Stamp:

PRELIMINARY
NOT FOR CONSTRUCTION

Review after Final 03.31.2014

Revisions:

1	Revision 1	Date 1

Sheet Title:

Exterior Elevations & Partial Sections

Sheet No.:

A4.10

3/31/2014 8:47:25 PM C:\Users\besangster\Documents\PSHH - Salsipuedes Central_besangster.rvt

© Copyright - Peikert + RRM Design Group

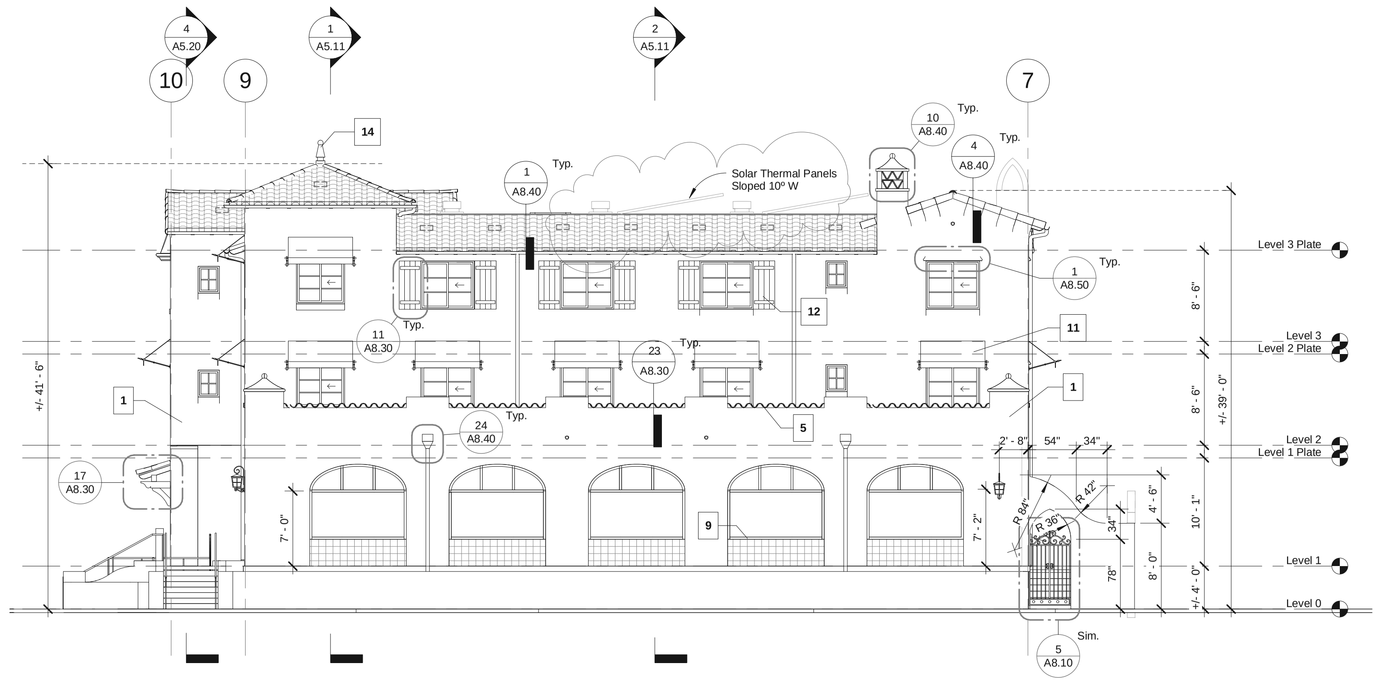

1 Haley Street - South Elevation
SCALE: 1/8" = 1'-0"

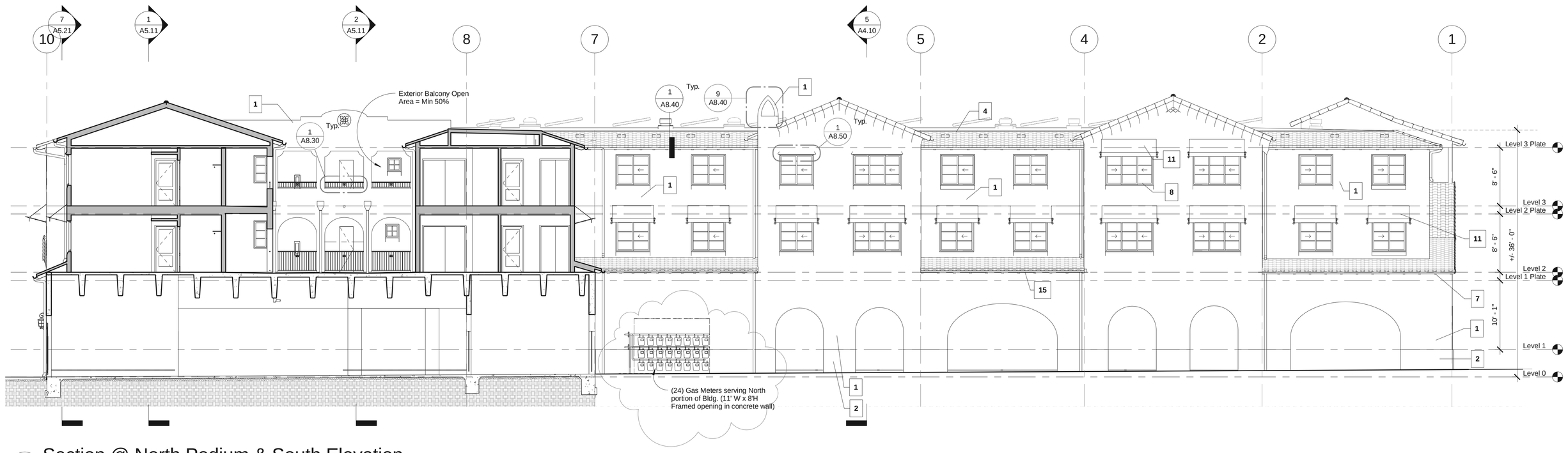

2 Section @ North Podium & South Elevation
SCALE: 1/8" = 1'-0"

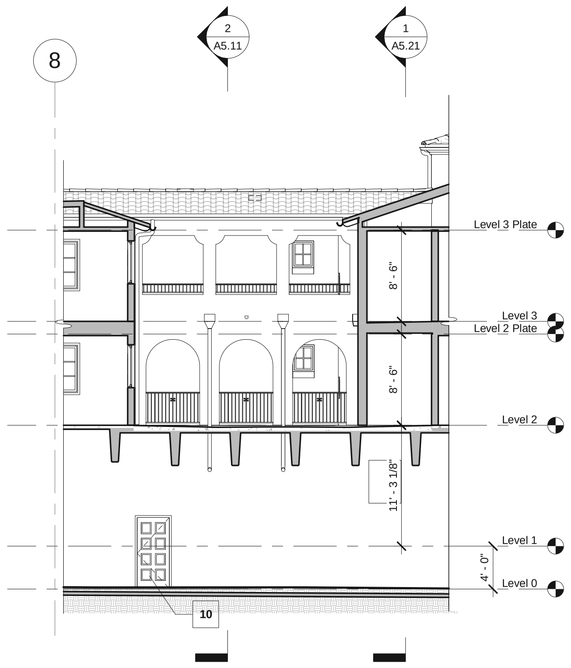

5 Podium Plaza - South Elevation
SCALE: 1/8" = 1'-0"

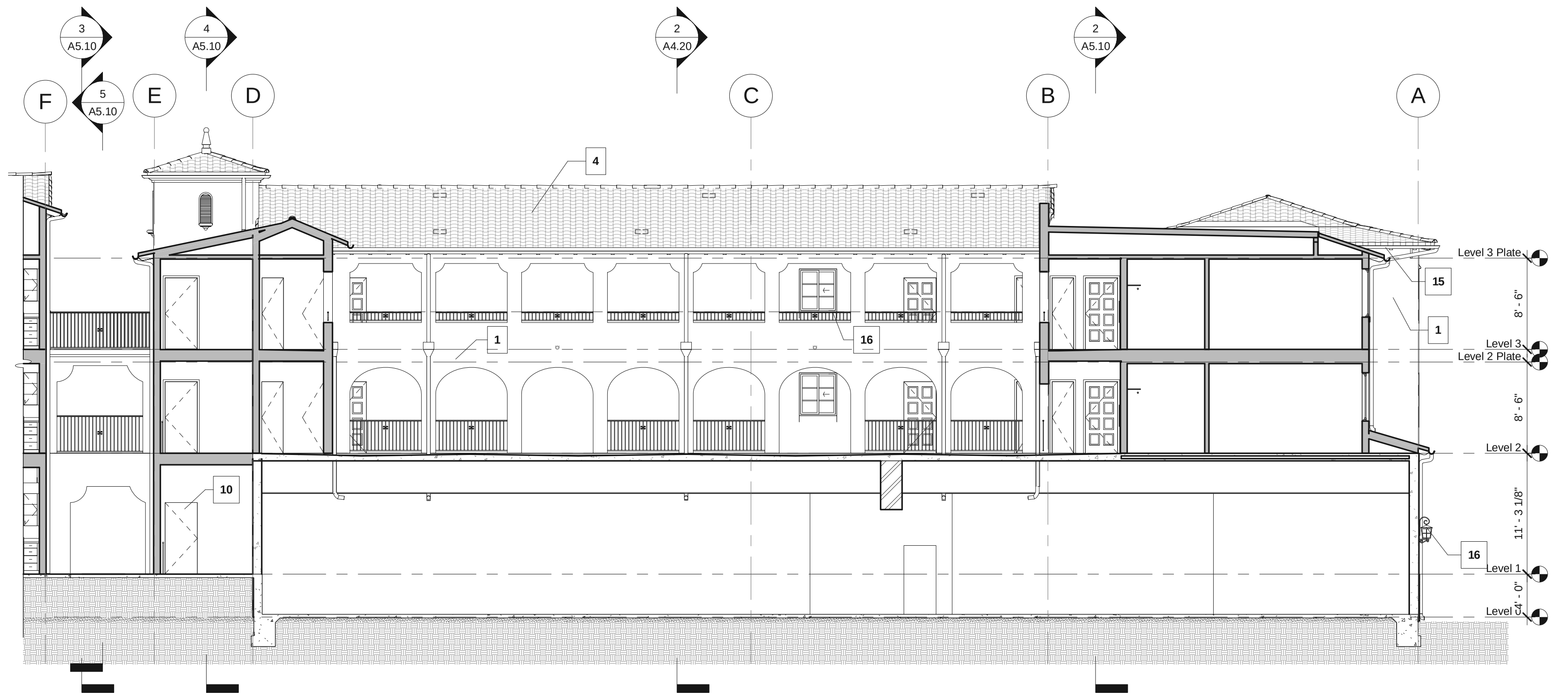

4 Podium Plaza - West Elevation
SCALE: 1/8" = 1'-0"

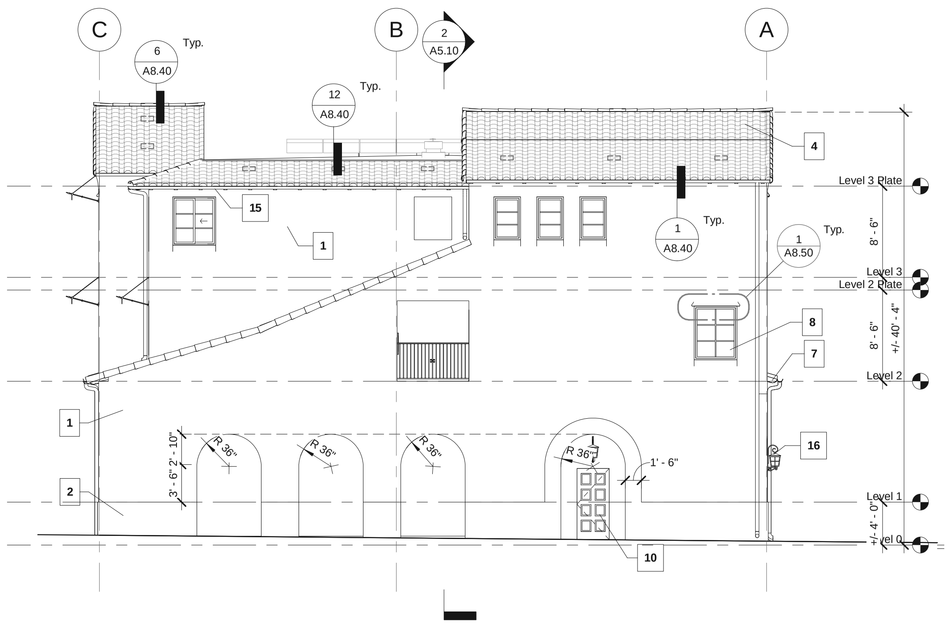

3 East Elevation - North Wing
SCALE: 1/8" = 1'-0"

Exterior Materials Schedule

Keynote	Description	Material/Manufacturer/Model	Texture/Finish	Color
1	Exterior Finish 1	Cement Plaster - La Habra Integral Color	20/30 Sand Float	Pure Ivory X-53
1*	Exterior Finish 1 w/ Diamond Score Lines	Cement Plaster - La Habra Integral Color	20/30 Sand Float	Pure Ivory X-53
2	Exterior Finish 2	Cement Plaster - La Habra Integral Color	20/30 Sand Float	Clay X-830
4	Roof - Field Tile	Boral/US Tile Clay - S Tile		Carmel Blend
5	Eave, Ridge, Wall Cap	Boral/US Tile Clay - Barrel Tile		Carmel Blend
6	Roof - Single Ply Membrane	PVC		White
7	Exterior Woodwork, Rafter Tails	Sikkens - Rubbol Solid Body		Chestnut Brown
8	Window	Milgard Vinyl	Integral	Espresso
9	Store Front System	Kawneer Aluminum	Anodized	Medium Bronze
10	Exterior Entry Door	Varies - per Schedule		
11	Awning	Sunbrella		Mixed
12	Shutter	Vinyl	B&B Style - Plank	Federal Brown
13	Decorative Tile	Original Mission Tile - Cement		Multi
14	Decorative Finial	Stone		
15	Gutter/Downspout	Senox Seamless Aluminum	Factory Baked	Musket Brown
16	Light Fixture, Exterior Sconce	Metal/Glass		
17	Waterproof Deck/Traffic Topping	Mer-Ko Acrlic Topcoat		Sand Dune

Notes

1. Submit Physical Samples of all Finish Colors & Textures for verification prior to order.
2. Exterior Light Fixtures mounted over walking surfaces shall have max. depth of 4" where height is lower than 6'8".
(CBC 1003.3.3 Horizontal projections)

peikert + rrmdesigngroup

10 E. Figueroa St., Suite 1
Santa Barbara, CA 93101

Tel: 805.963.8283
Fax: 805.963.8184
www.rrmdesign.com

Project Name:

Jardin de las Rosas

Haley & Salsipuedes St.
Santa Barbara, CA

Peoples' Self-Help Housing

Consultant:

Stamp:

PRELIMINARY
NOT FOR CONSTRUCTION

Review after Final 03.31.2014

Revisions:

1	Revision 1	Date 1

Sheet Title:

Exterior Elevations & Partial Sections

Sheet No.:

A4.20

3/31/2014 8:47:32 PM C:\Users\besangster\Documents\PSHH - Salsipuedes Central_besangster.rvt

© Copyright - Peikert + RRM Design Group

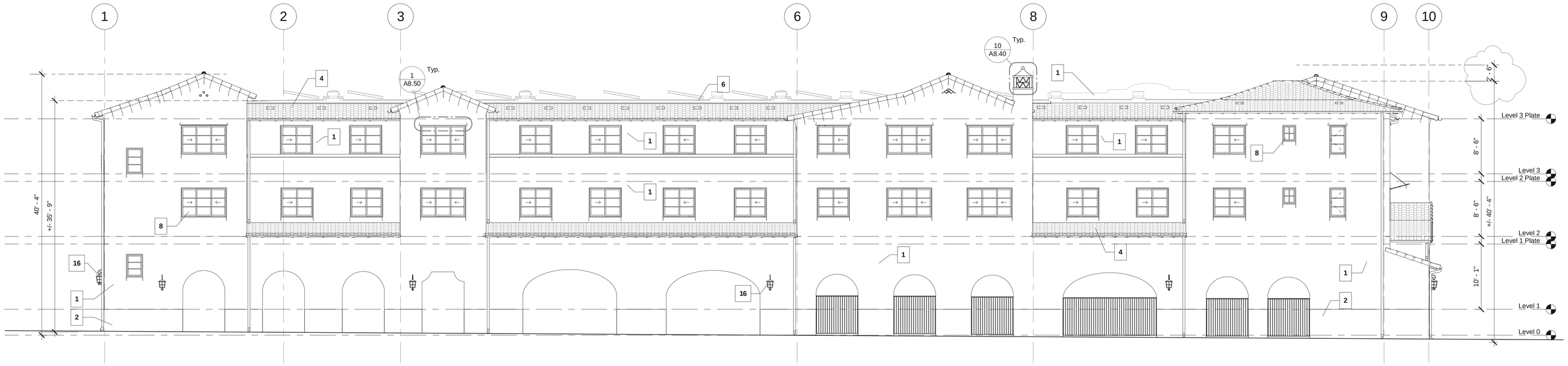

1 North Elevation
SCALE: 1/8" = 1'-0"

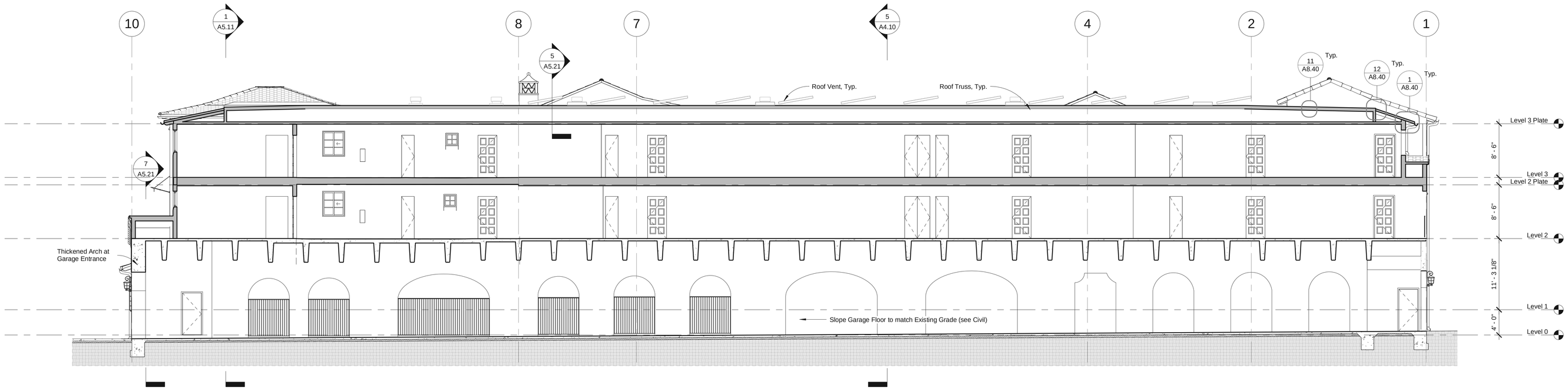

2 Section Through Parking Garage/Corridor Above
SCALE: 1/8" = 1'-0"

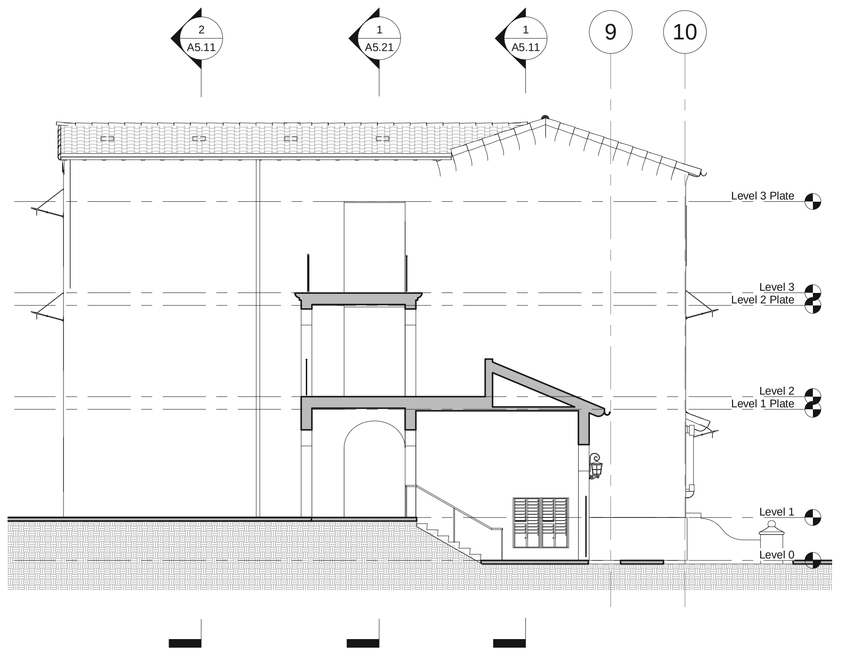

5 Breezeway Section Looking South
SCALE: 1/8" = 1'-0"

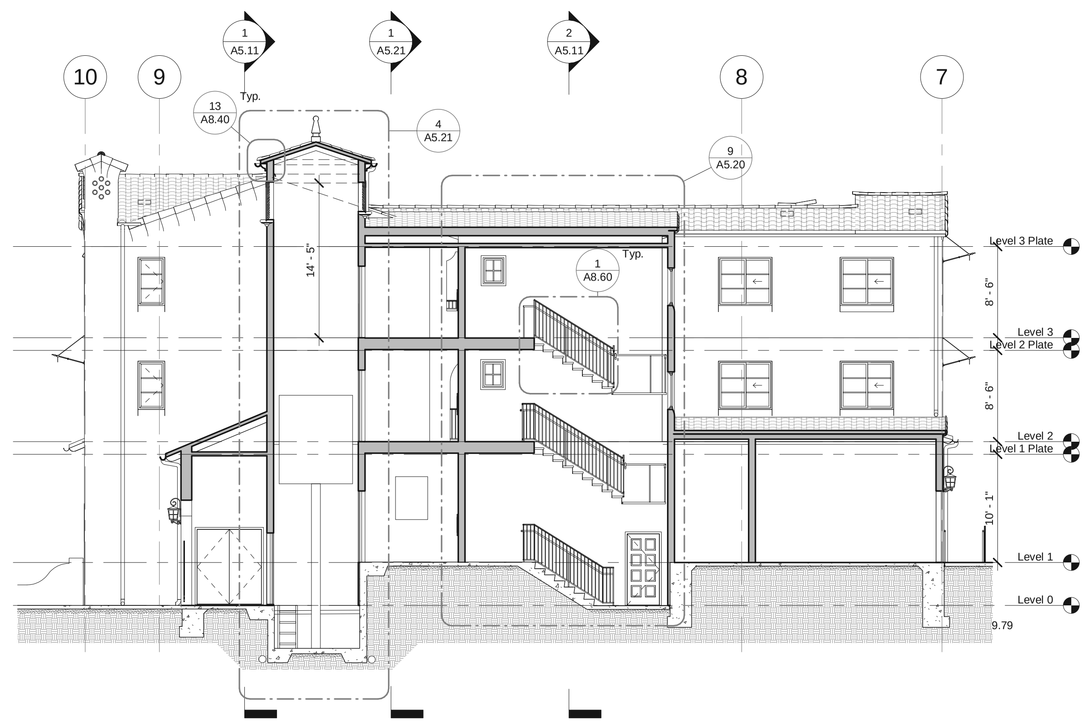

4 Circulation Tower Section
SCALE: 1/8" = 1'-0"

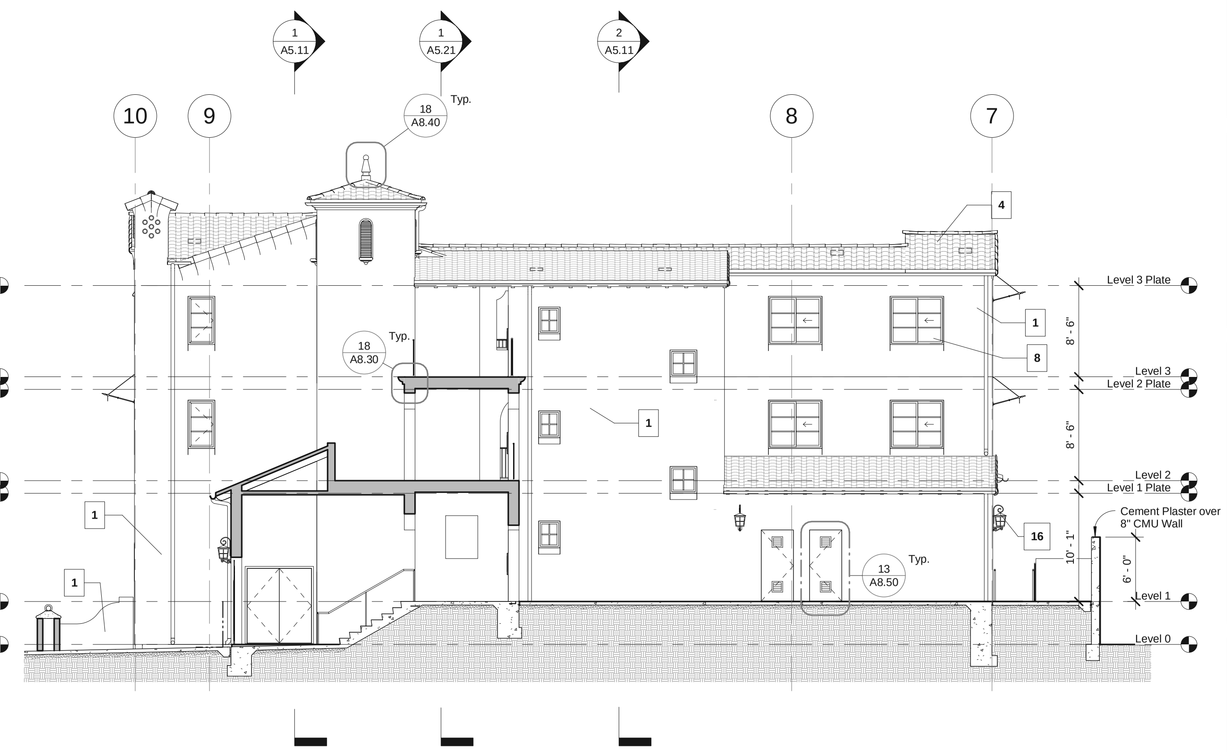

3 Breezeway Section looking North
SCALE: 1/8" = 1'-0"

peikert + rrmdesigngroup

10 E. Figueroa St., Suite 1
Santa Barbara, CA 93101

Tel: 805.963.8283
Fax: 805.963.8184
www.rrmdesign.com

Project Name:

Jardin de las Rosas

Haley & Salsipuedes St.
Santa Barbara, CA

Peoples' Self-Help Housing

Consultant:

Stamp:

PRELIMINARY
NOT FOR CONSTRUCTION

Review after Final	03.31.2014

Revisions:

	Revision 1	Date 1
1		

Sheet Title:

Exterior Elevations & Sections

Sheet No.:

A5.10

3/31/2014 8:47:41 PM C:\Users\besangster\Documents\PSHH - Salsipuedes Central_besangster.rvt

© Copyright - Peikert + RRM Design Group

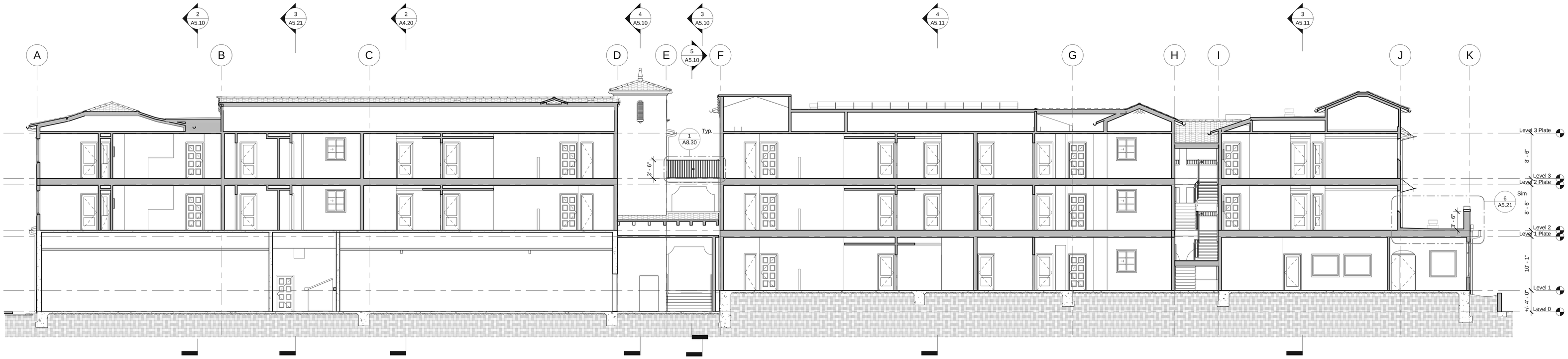

1 Eastwest Section1
SCALE: 1/8" = 1'-0"

2 Eastwest Section
SCALE: 1/8" = 1'-0"

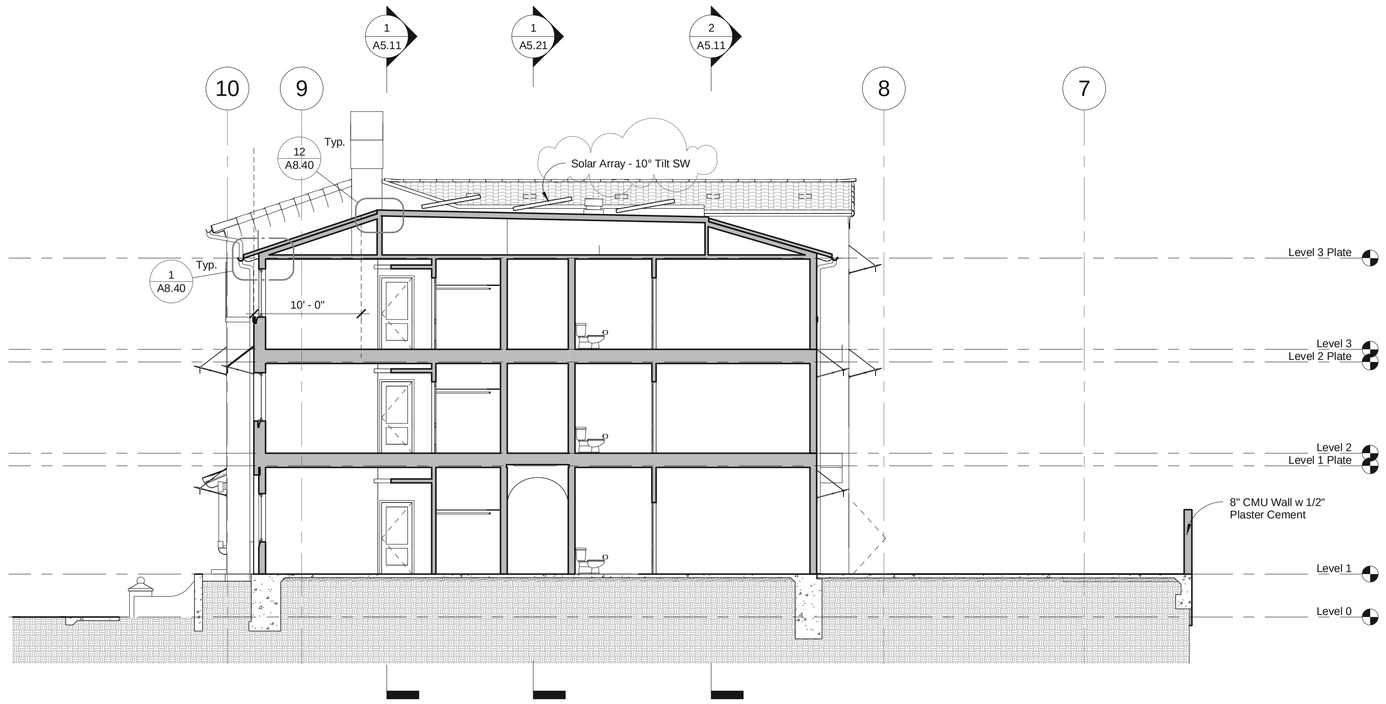

4 Section at Central Residential Units
SCALE: 1/8" = 1'-0"

3 Section @ Community Center
SCALE: 1/8" = 1'-0"

peikert + rrmdesigngroup

10 E. Figueroa St., Suite 1
Santa Barbara, CA 93101

Tel: 805.963.8283
Fax: 805.963.8184
www.rrmdesign.com

Project Name:

Jardin de las Rosas

Haley & Salsipuedes St.
Santa Barbara, CA

Peoples' Self-Help Housing

Consultant:

Stamp:

PRELIMINARY
NOT FOR CONSTRUCTION

Review after Final	03.31.2014

Revisions:

1	Revision 1	Date 1

Sheet Title:

Building Sections

Sheet No.:

A5.11

3/31/2014 8:47:55 PM C:\Users\besangster\Documents\PSHH - Salsipuedes Central_besangster.rvt

© Copyright - Peikert + RRM Design Group

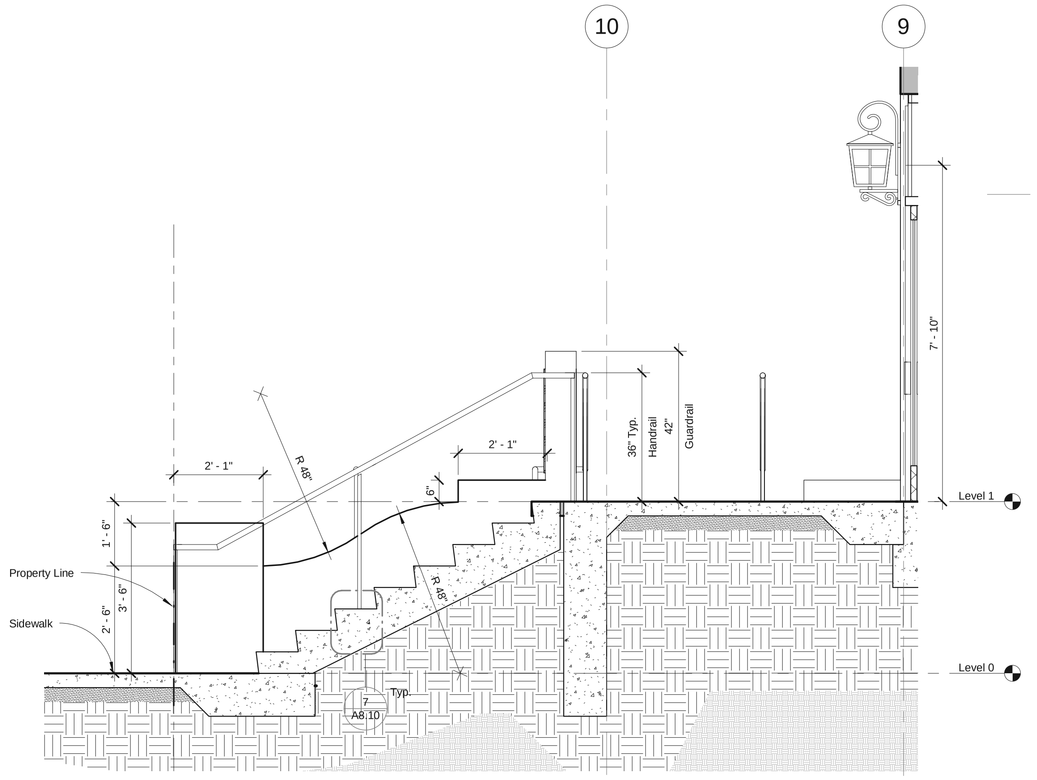

3 East/West Entry Stair Section
SCALE: 1/2" = 1'-0"

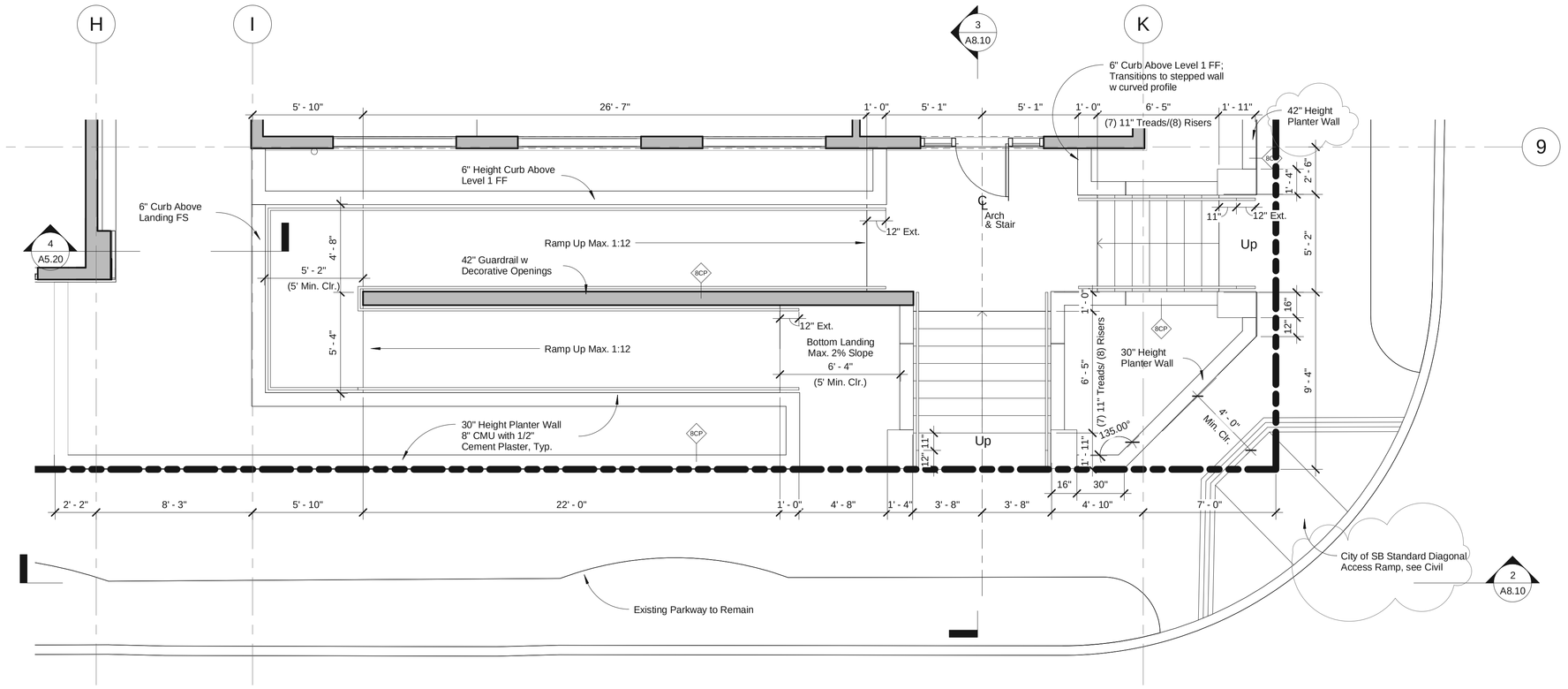

1 Corner Ramp Detail
SCALE: 1/4" = 1'-0"

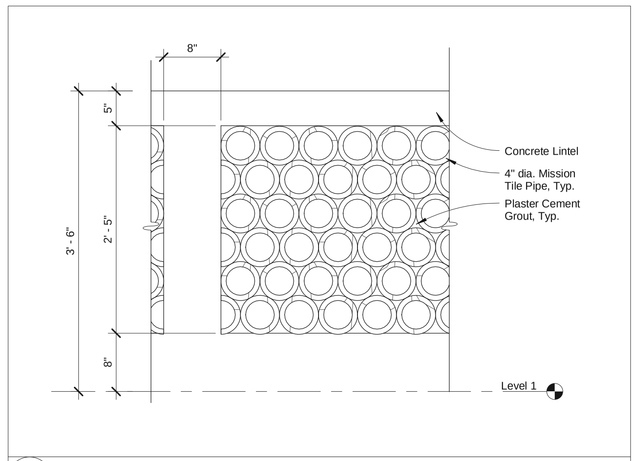

A **Tile Pipe Infill Guardrail Wall** SCALE: 1" = 1'-0"

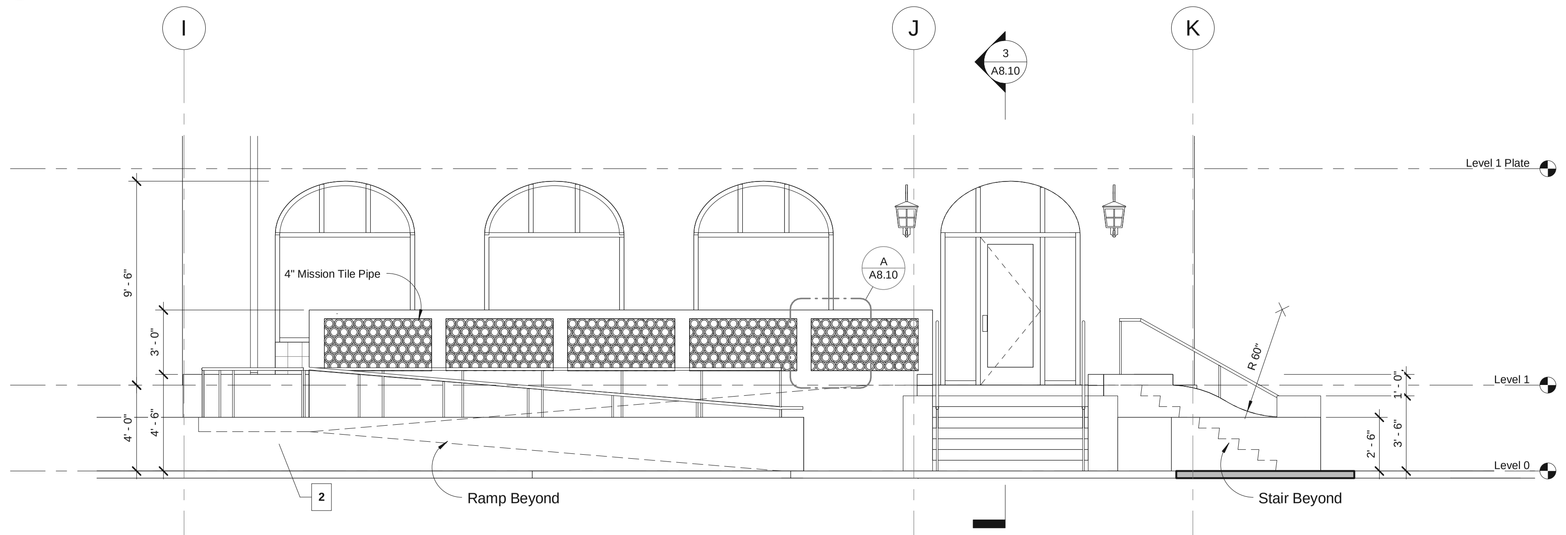

2 Corner Ramp Elevation
SCALE: 1/4" = 1'-0"

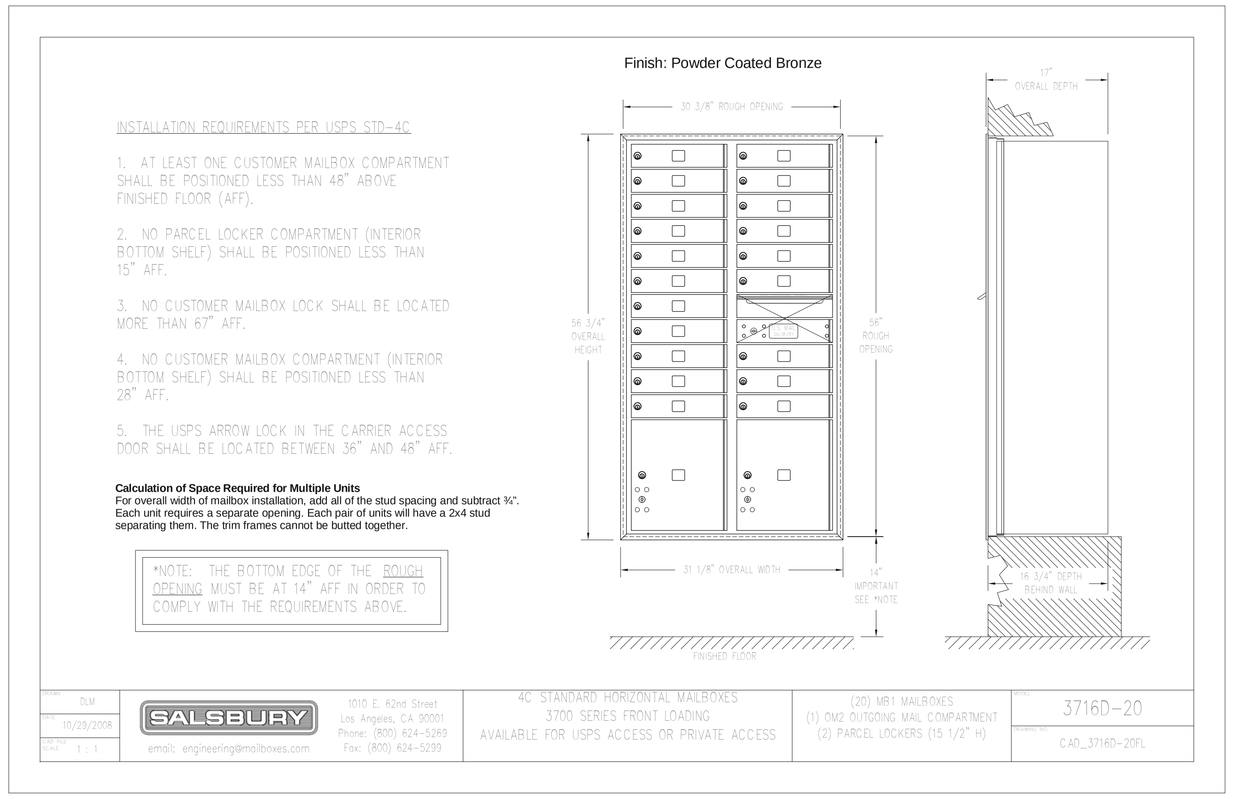

4 Mailboxes
SCALE: 1" = 1'-0"

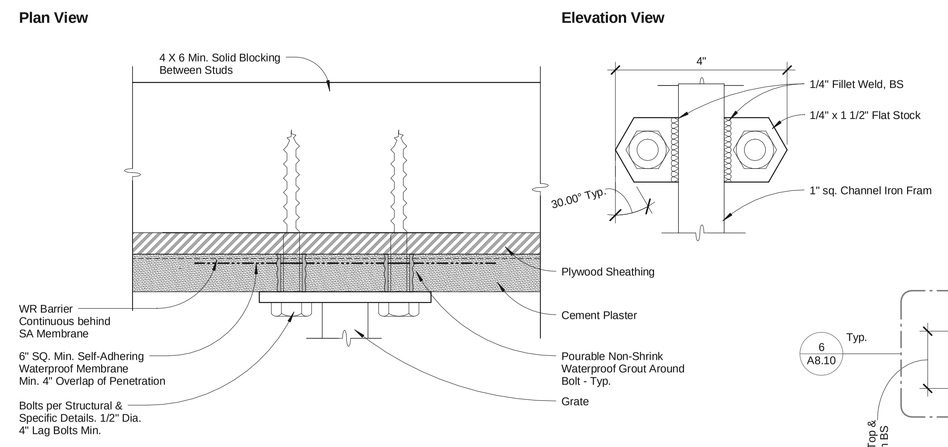

6 Wrought Iron Hanger Detail
SCALE: 6" = 1'-0"

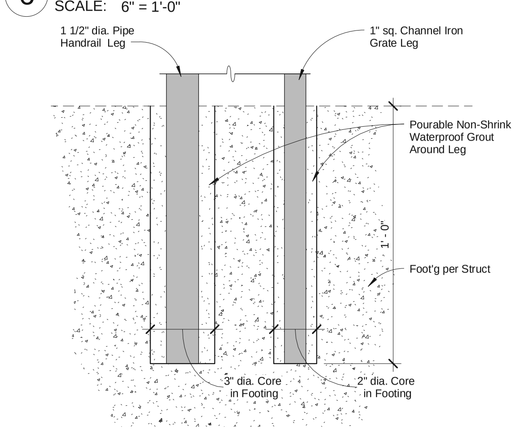

7 Gate & Handrail Leg Detail
SCALE: 3" = 1'-0"

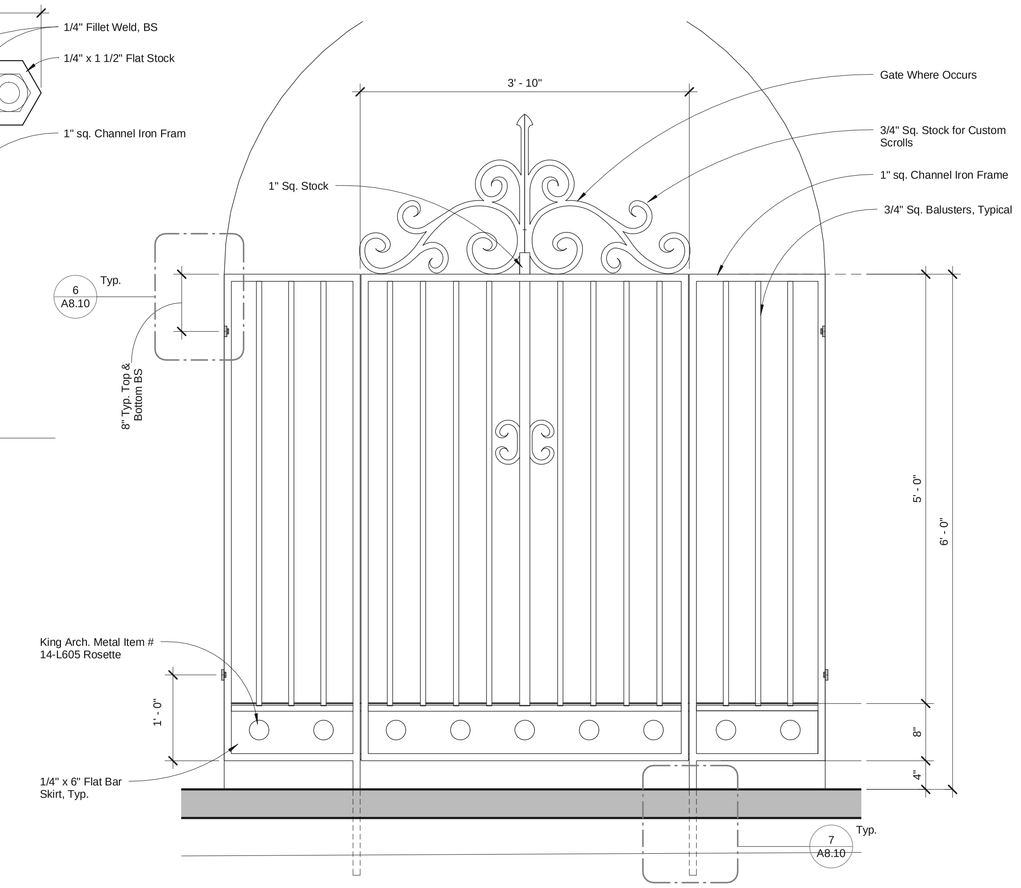

5 Wrought Iron Gate/ Grate Design
SCALE: 1" = 1'-0"

peikert + rrmdesigngroup
10 E. Figueroa St., Suite 1
Santa Barbara, CA 93101
Tel: 805.963.8283
Fax: 805.963.8184
www.rrmdesign.com

Project Name:

Jardin de las Rosas

Haley & Salsipuedes St.
Santa Barbara, CA

Peoples' Self-Help Housing

Consultant:

Stamp:

PRELIMINARY
NOT FOR CONSTRUCTION

Review after Final	03.31.2014

Revisions:

	Revision 1	Date 1
1		

Sheet Title:

Site Details

Sheet No.:

A8.10

3/31/2014 8:48:06 PM C:\Users\besangster\Documents\PSHH - Salsipuedes Central_besangster.rvt

© Copyright - Peikert + RRM Design Group

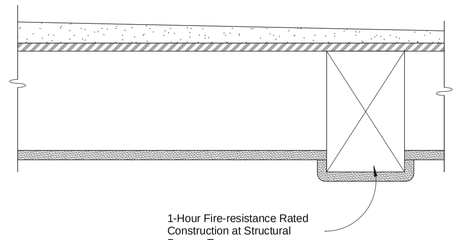

21 Ext. Balcony/Deck Assembly

SCALE: 1 1/2" = 1'-0"

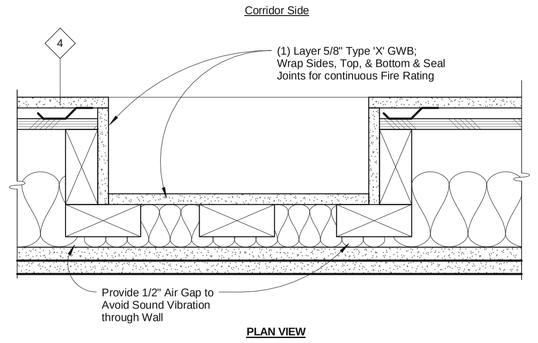

16 Recessed Fixture in Rated Wall

SCALE: 3" = 1'-0"

GA File No. RC 2604 — **1 HOUR**

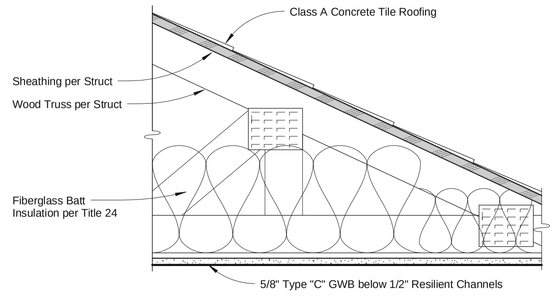

GA File No. RC 2604
One layer 5/8" proprietary type X gypsum wallboard applied at right angles to resilient furring channels 16" o.c. (12" o.c. when insulation is draped over channels) with 1" Type S drywall screws 12" o.c. Gypsum board end joints attached with screws 8" o.c. to additional pieces of channel 60" long located 3" back on either side of end joint. Resilient channels applied at right angles to bottom chord of pitched wood trusses 24" o.c. with 11/4" Type S or W screws. Glass fiber insulation secured to wood structural panels or draped over channels. Trusses supporting 15/32" wood structural panels applied at right angles to trusses with construction adhesive and 6d ring shank nails 12" o.c.

United States Gypsum Company - **5/8**" SHEETROCK® Brand FIRECODE® C Core Gypsum Panels

11 Roof Assembly, Typ.

SCALE: 1 1/2" = 1'-0"

GA File No. WP 3614 — **1 Hour** — **GA File No. WP 7053** — **FSTC 50-54**

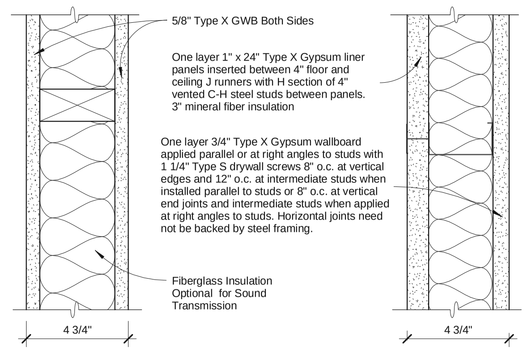

NOTE: Rated Assembly is continuous through Floor/Ceiling Assemblies

ALT: For use adjacent to Living Quarters

E Shaft Liner

SCALE: 3" = 1'-0"

CBC Calculated Fire Resistance for Wood Assemblies — **1 Hour**

4A
6A
6At
6As

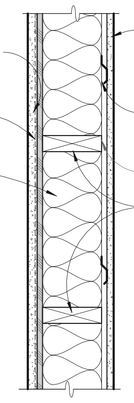

Exterior Side

Cement Plaster over Lath over WR Barrier (Plaster mix 1:4 for scratch coat and 1:5 for brown coat, by volume, cement to sand)

1/2" Shear Panel where required per Structural; OSB sheathing or furring strips to provide flush substrate for cement plaster

Fiberglass Batt Insulation per Title 24 Report

Interior Side

5/8" Type X GWB Typical, **Except:** Substitute 5/8" Type X Mold-Resistant GWB w/ Fiberglass Mats; Non-paper faced at all bathroom walls & ceilings

Wall Type 6At:
Add 1/2" or 5/8" Furring as needed to flush interior face of finish

Wall Type 6As:
Add 1/2" Resilient Channels for additional sound insulation

2 x 6 Framing @ 16" OC, Typ.

Comply with the Following Standards:

Cement Plaster	ASTM C 926
Lathing & Furring	ASTM C 1063
Welded Wire Lath	ASTM C 933
Weather Resistive Barrier	ASTM D 226

Exterior walls - rating based on interior membrane and framing per CBC 721.6.2.3:

5/8" Type X GWB	= 40 min
Wood Studs 16 o.c.	= 20 min
	= 60 min

Exterior Membrane may consist of sheathing, paper and stucco on lath or Siding (Ref. Table 721.6.2(3))

PLAN VIEW

8A Exterior Wall, Typical

SCALE: 1 1/2" = 1'-0"

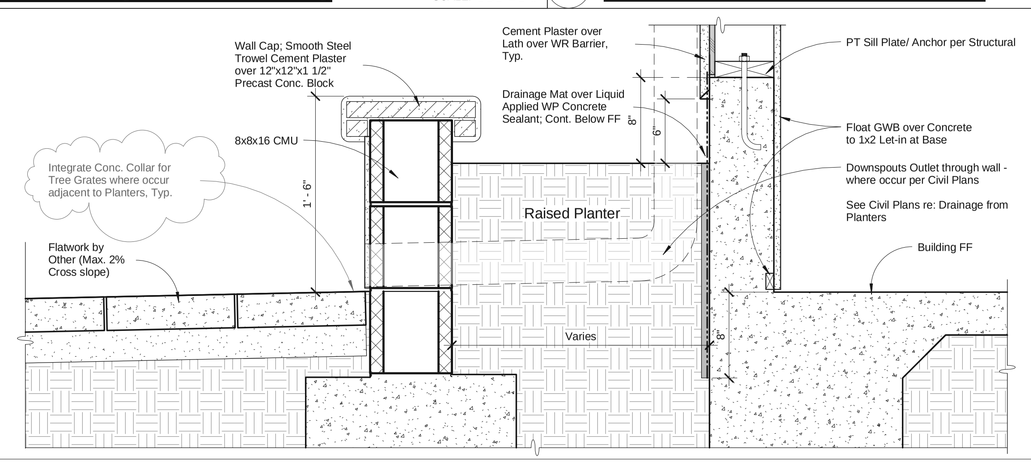

22 Raised Planter at Plaza, Typ.

SCALE: 1 1/2" = 1'-0"

GA File No. FC 5011 — **1 HOUR** — **STC 60-64** — **IIC 58**

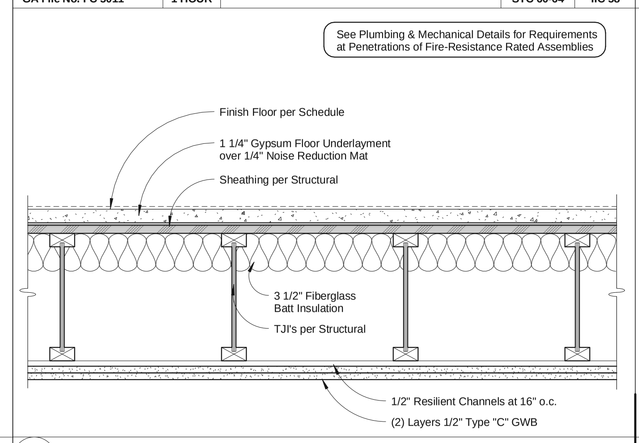

12 Floor/Ceiling Assembly, Typ.

SCALE: 1 1/2" = 1'-0"

CBC TABLE 720.1(2) Item #15-1.2 — **1 Hour**

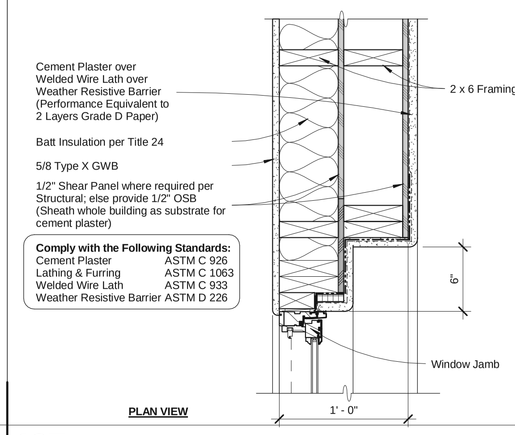

Comply with the Following Standards:

Cement Plaster	ASTM C 926
Lathing & Furring	ASTM C 1063
Welded Wire Lath	ASTM C 933
Weather Resistive Barrier	ASTM D 226

PLAN VIEW

12F Furred Window Wall

SCALE: 1 1/2" = 1'-0"

CBC TABLE 720.1(2) Item #15-1.2 — **1 Hour**

6B
8B
10B

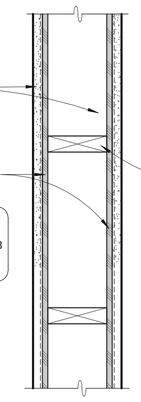

Cement Plaster over Welded Wire Lath over Weather Resistive Barrier (Performance Equivalent to 2 Layers Grade D Paper)

1/2" Shear Panel where required per Structural; else provide 1/2" OSB (Sheath whole building as substrate for cement plaster)

Comply with the Following Standards:

Cement Plaster	ASTM C 926
Lathing & Furring	ASTM C 1063
Welded Wire Lath	ASTM C 933
Weather Resistive Barrier	ASTM D 226

6B 2 x 6 Framing
8B 2 x 8 Framing
10B 2 x 10 Framing
12B 2 x 12 Framing

PLAN VIEW

12B Exterior, Stucco Both Sides

SCALE: 1 1/2" = 1'-0"

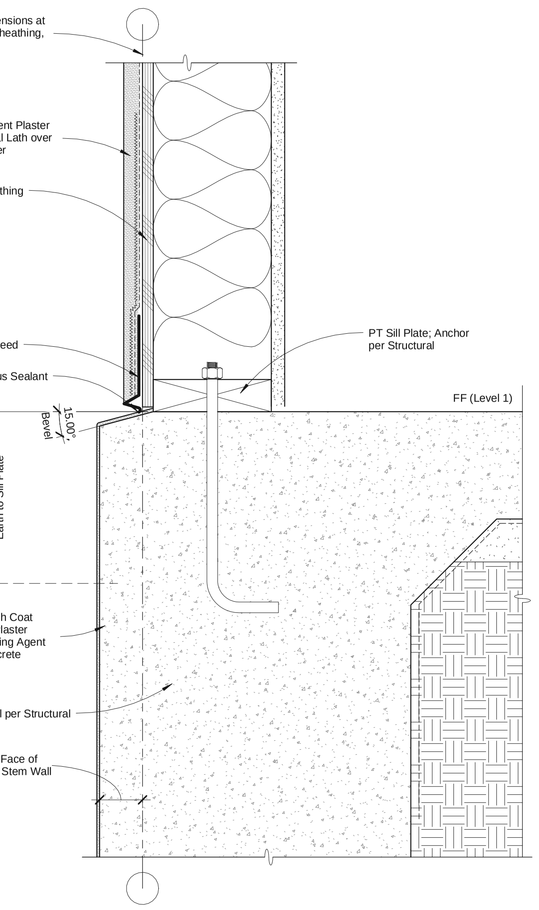

29 Ext. Wall Base/Watermark

SCALE: 3" = 1'-0"

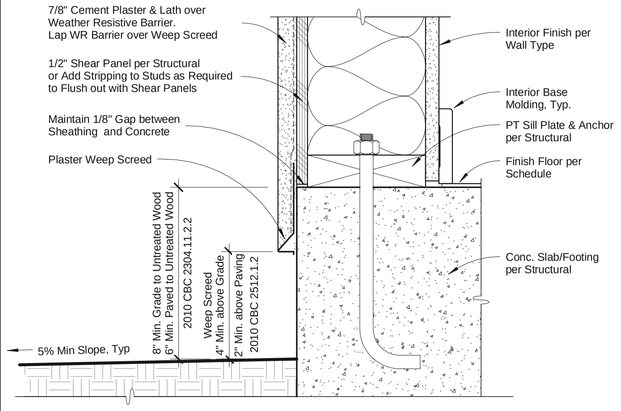

Note: Exterior Face of Sheathing Aligns with Outside Face of Slab/Footing

18 Ext. Wall at Slab Edge

SCALE: 3" = 1'-0"

GA File No. FC 5109 — **1 HOUR** — **STC 55-59** — **IIC 50**

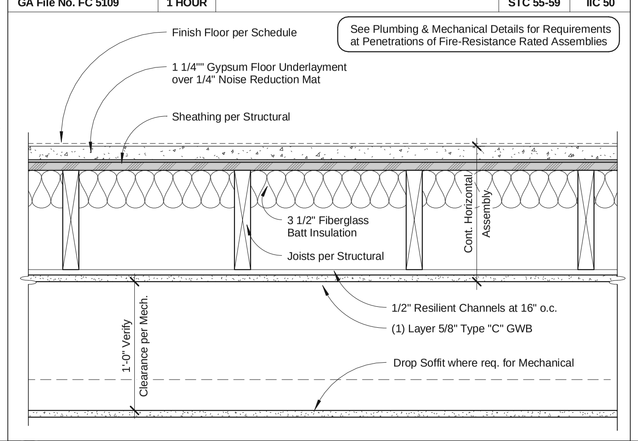

13 Floor/Ceiling at Corridor

SCALE: 1 1/2" = 1'-0"

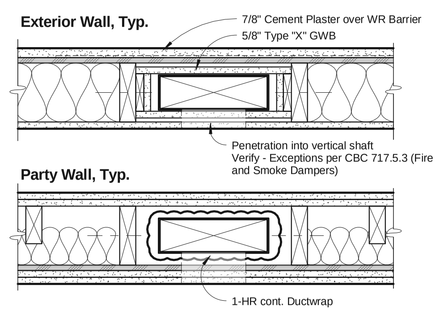

8 In-wall Exhaust Shaft Plan

SCALE: 1 1/2" = 1'-0"

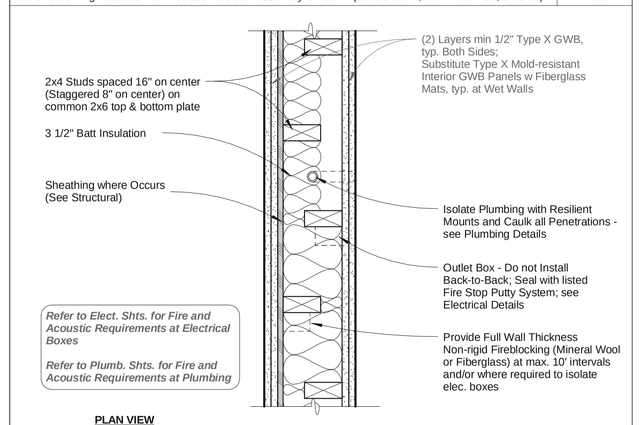

PLAN VIEW

6P Party Wall - (1 Hour Rated)

SCALE: 1 1/2" = 1'-0"

Note: Exterior Face of Sheathing Aligns with Outside Face of Slab/Footing

19 Ext. Wall at Patios, Walks

SCALE: 3" = 1'-0"

GA File No. FC 5011 - *Code Minimums for reference only; provide assemblies per details, or approved equal*
Base layer 1/2" proprietary type X gypsum wallboard or gypsum veneer base applied at right angles to resilient furring channels 24" o.c. (16" o.c. when insulation is used) with 1" Type S drywall screws 16" o.c. Gypsum board end joints located midway between continuous channels and attached with screws 8" to additional pieces of channel 60" long located 3" back on either side of end joint. Resilient channels applied at right angles to minimum 10" deep wood I joists spaced a maximum of 19" o.c. with 11/4" Type S drywall screws. Face layer 1/2" proprietary type X gypsum wallboard or gypsum veneer base applied at right angles to resilient furring channels 15/8" Type S drywall screws 8" o.c. and 11/2" Type G screws 8" o.c. at the butt joints located mid span between the resilient channels. Glass fiber insulation secured to subfloor or loose fill insulation applied directly over gypsum board. Wood I joists supporting 19/32" wood structural panel subfloor applied at right angles to joists with construction adhesive and 6d ring shank nails 12" o.c. Minimum 1/2" proprietary gypsum floor topping applied over subfloor.
STC rated with I joists spaced 24" o.c., 3 1/2" glass fiber insulation in joist spaces, 3/4" proprietary gypsum floor topping poured over 1/4" proprietary sound reduction mat, and with finish flooring of sheet vinyl, engineered wood laminate, and ceramic tile. (STC 64 when sheet vinyl or engineered wood laminate is applied to floor; STC 66 when tested with ceramic tile applied to floor.)
PROPRIETARY GYPSUM COMPONENTS
United States Gypsum Company - 1/2" SHEETROCK® Brand FIRECODE® C Core Gypsum Panels
- LEVELROCK® Brand Floor Underlayment

GA File No. FC 5109 - *Code Minimums for reference only; provide assemblies per details, or approved equal*
One layer **5/8"** proprietary type X gypsum wallboard or gypsum veneer base applied at right angles to resilient furring channels 24" o.c. (16" o.c. when batt insulation is used; 12" o.c. when loose fill insulation is used) with 1" Type S drywall screws 12" o.c. Gypsum board end joints located midway between continuous channels and attached with screws 8" to additional pieces of channel 60" long located 3" back on either side of end joint. Resilient channels applied at right angles to nominal 2 x 10 wood joists spaced a maximum of 24" o.c. with **11/4**" Type S drywall screws. Glass or mineral fiber batt insulation stapled to subfloor or or loose fill insulation applied directly over gypsum board. Wood joists supporting **15/32**" wood structural panel subfloor applied at right angles to joists with construction adhesive and 6d ring shank nails 12" o.c. Minimum **1/2**" proprietary gypsum floor topping applied over subfloor.
STC and IIC rated with both joists and resilient channels spaced 16" o.c., **31/2**" glass fiber insulation in joist spaces, **3/4**" proprietary gypsum floor topping poured over **1/4**" proprietary sound reduction mat, and with finish flooring of C&P, sheet vinyl, and engineered wood laminate.
PROPRIETARY GYPSUM COMPONENTS
United States Gypsum Company - **5/8**" SHEETROCK® Brand FIRECODE® C Core Gypsum Panels
- LEVELROCK® Brand Floor Underlayment

14 Floor/Ceiling GA Files1

SCALE: 1 1/2" = 1'-0"

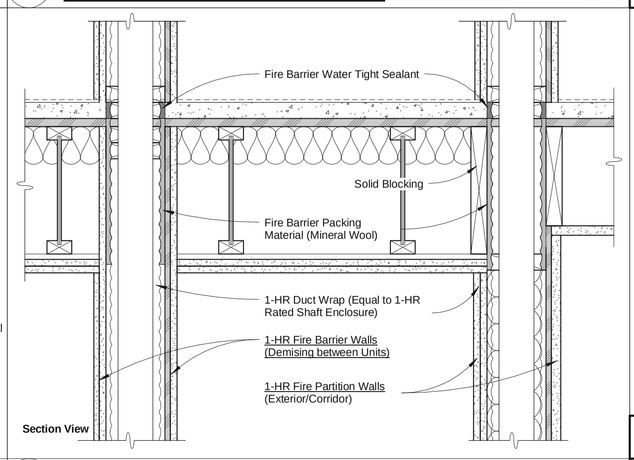

9 In-wall Exhaust Shaft Section

SCALE: 1 1/2" = 1'-0"

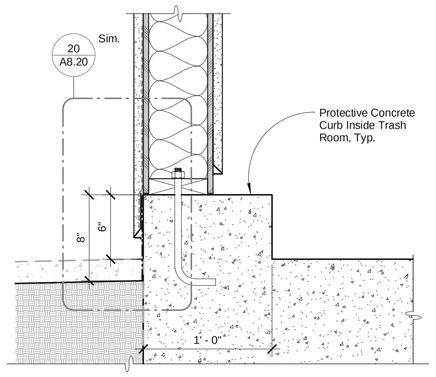

30 Trash Room Curb

SCALE: 1 1/2" = 1'-0"

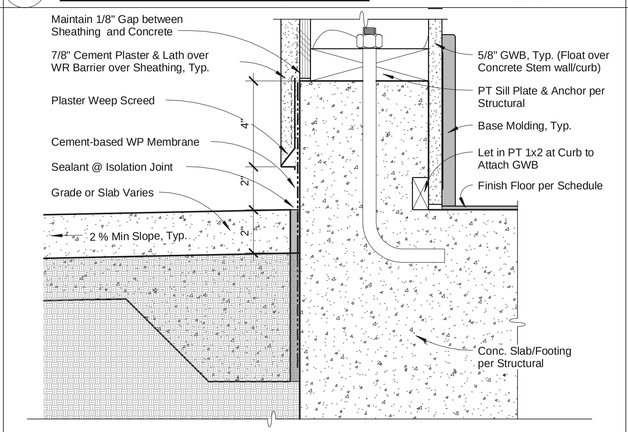

Note: Exterior Face of Sheathing Aligns with Outside Face of Slab/Footing

20 Ext. Wall Curb (Adj. Planters)

SCALE: 3" = 1'-0"

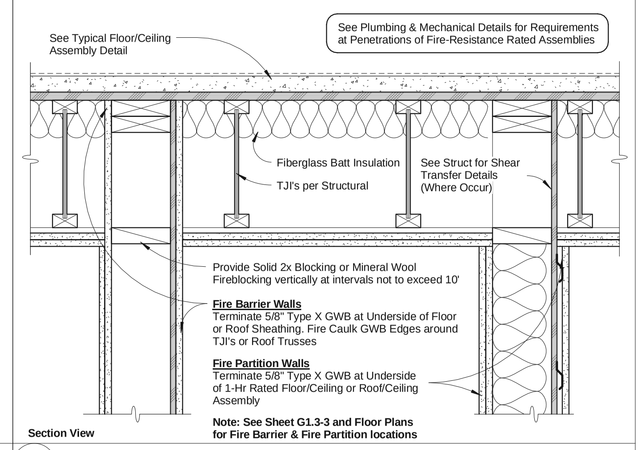

Note: See Sheet G1.3-3 and Floor Plans for Fire Barrier & Fire Partition locations

15 Fire Partitions & Fire Barriers

SCALE: 1 1/2" = 1'-0"

GA File No. WP 3614 — **1 Hour at Wall Type 7 (Fire Barriers)**

4D

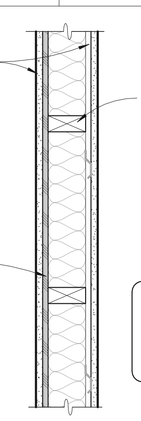

5/8" Type X GWB Typical, **Except:** Substitute 5/8" Type X Mold-Resistant GWB w/ Fiberglass Mats; Non-paper faced at all bathroom walls & ceilings

6C 2 x 6 Framing
4C 2 x 4 Framing

Shear Panel where occurs per Structural

GA File No. WP 3614
One layer 5/8" type X gypsum wallboard applied parallel or at right angles to each side of wood studs 16" o.c. with 1 1/4" Type W drywall screws 12" o.c.
Joints staggered 16" on opposite sides (LOAD-BEARING)

PLAN VIEW

6D Interior Wall, Typical

SCALE: 1 1/2" = 1'-0"

Owens Corning Acoustic Wall Insulation Guide - Assembly SWS277 (UL-U340 1 h, L.B. NBC-W9b, STC 55) — **1 Hour**

PLAN VIEW

6P Party Wall - (1 Hour Rated)

SCALE: 1 1/2" = 1'-0"

8C
10C

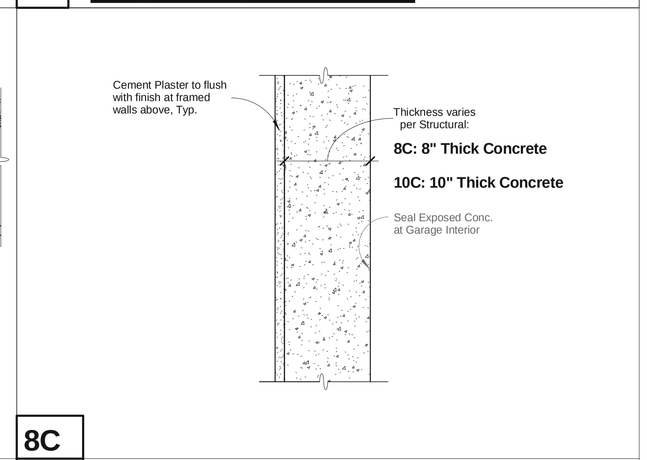

8C 10C Concrete Walls

SCALE: 1 1/2" = 1'-0"

peikert + rrmdesigngroup
10 E. Figueroa St., Suite 1
Santa Barbara, CA 93101
Tel: 805.963.8283
Fax: 805.963.8184
www.rrmdesign.com

Project Name:

Jardin de las Rosas

Haley & Salsipuedes St.
Santa Barbara, CA

Peoples' Self-Help Housing

Consultant:

Stamp:

PRELIMINARY NOT FOR CONSTRUCTION

Review after Final — 03.31.2014

Revisions:

	Revision 1	Date 1
1		

Sheet Title:

Wall & Ceiling Assembly Details

Sheet No.:

A8.20

3/31/2014 8:48:13 PM C:\Users\besangster\Documents\PSHH - Salsipuedes Central_besangster.rvt

© Copyright - Peikert + RRM Design Group

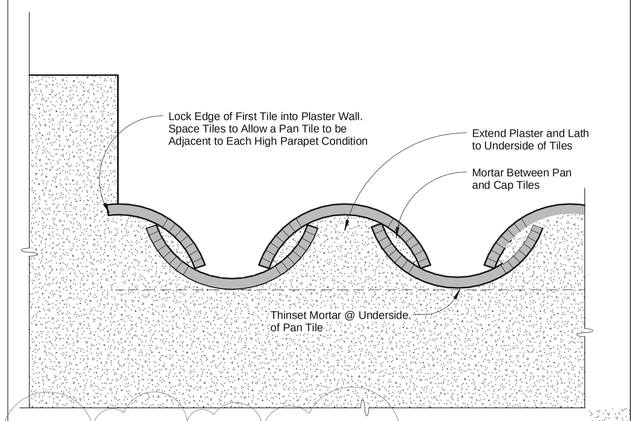

21 Low Parapet Wall Elevation

SCALE: 3" = 1'-0"

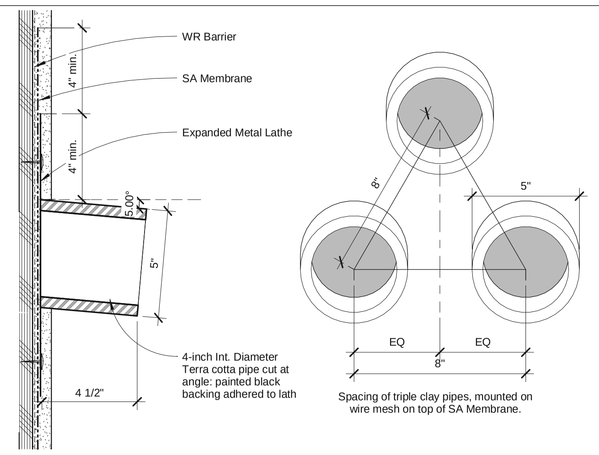

16 Clay Pipes (Non-Venting)

SCALE: 3" = 1'-0"

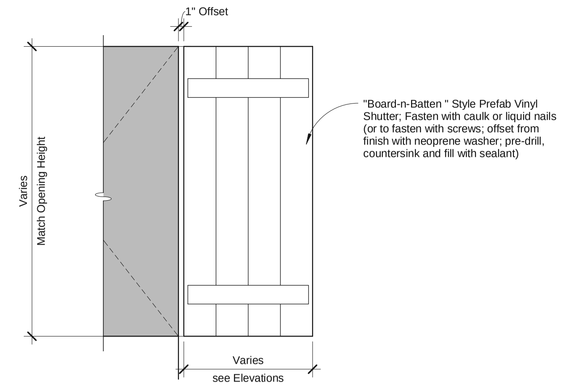

11 Decorative Shutter

SCALE: 3/4" = 1'-0"

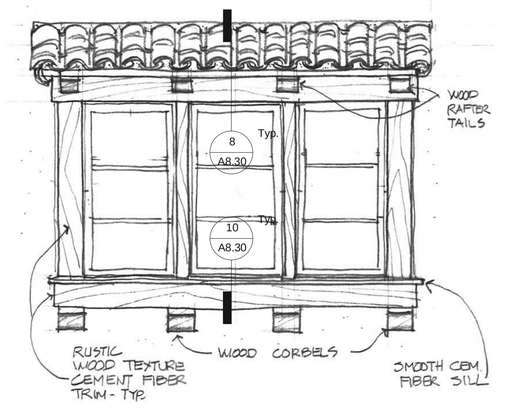

6 Bay Window Elevation

SCALE: 1/2" = 1'-0"

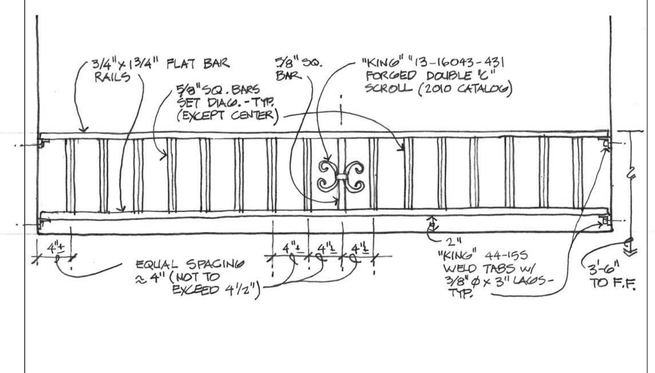

1 Short Guardrail

SCALE1 1/2" = 1'-0"

peikert + rrmdesigngroup

10 E. Figueroa St., Suite 1
Santa Barbara, CA 93101

Tel: 805.963.8283
Fax: 805.963.8184
www.rrmdesign.com

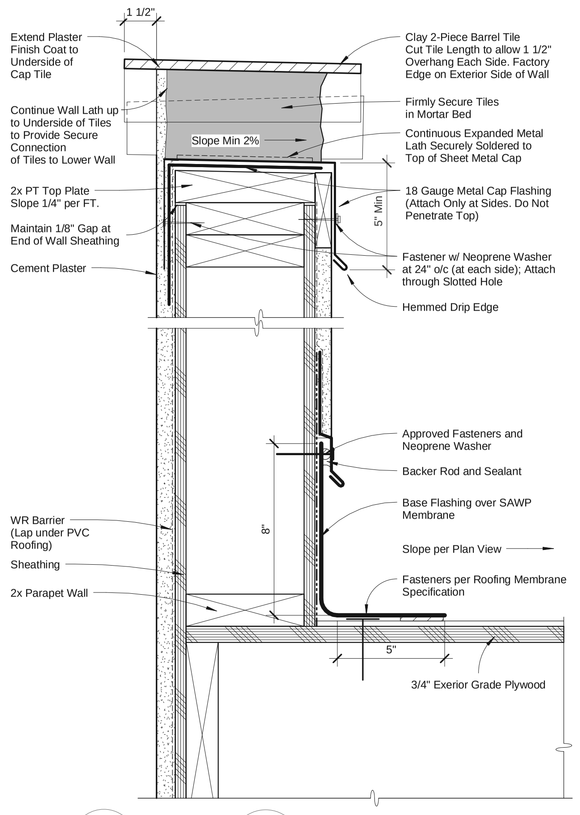

23 Low Parapet at Flat Roof

SCALE: 3" = 1'-0"

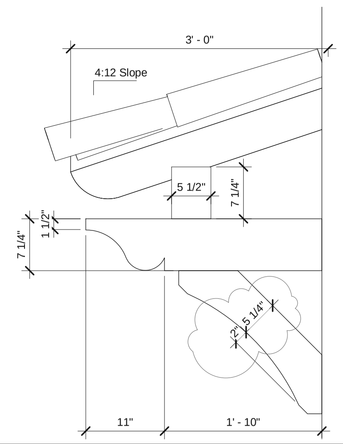

17 Window Roof Trellis

SCALE: 1" = 1'-0"

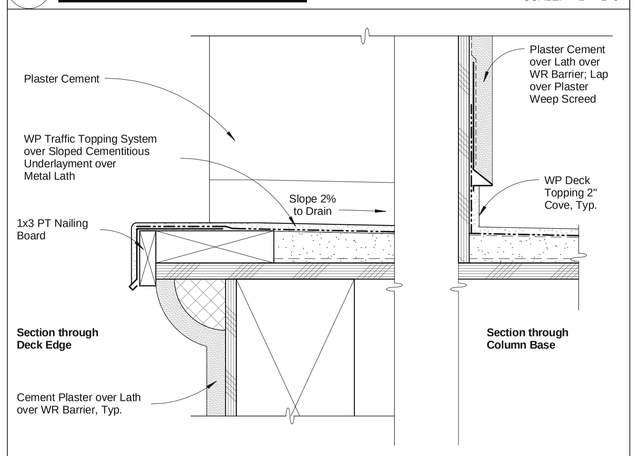

18 Deck Edge Detail

SCALE: 3" = 1'-0"

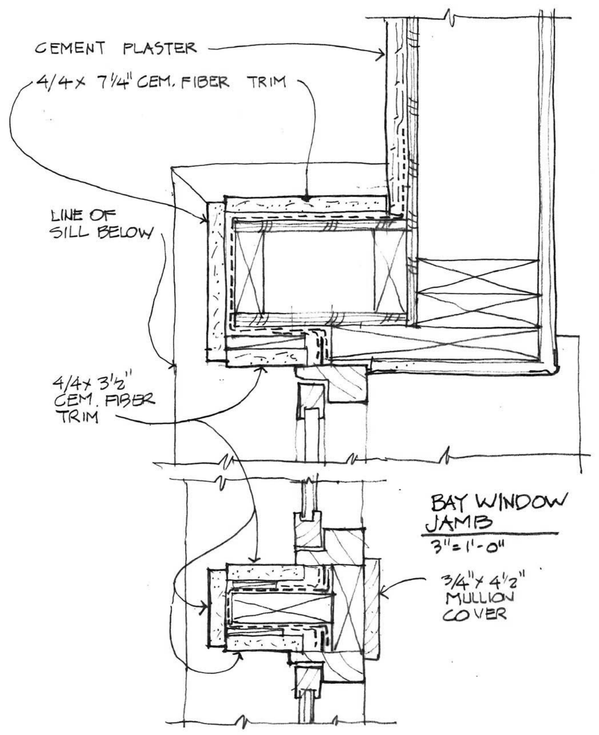

13 Bay Window Mullion

SCALE: 3" = 1'-0"

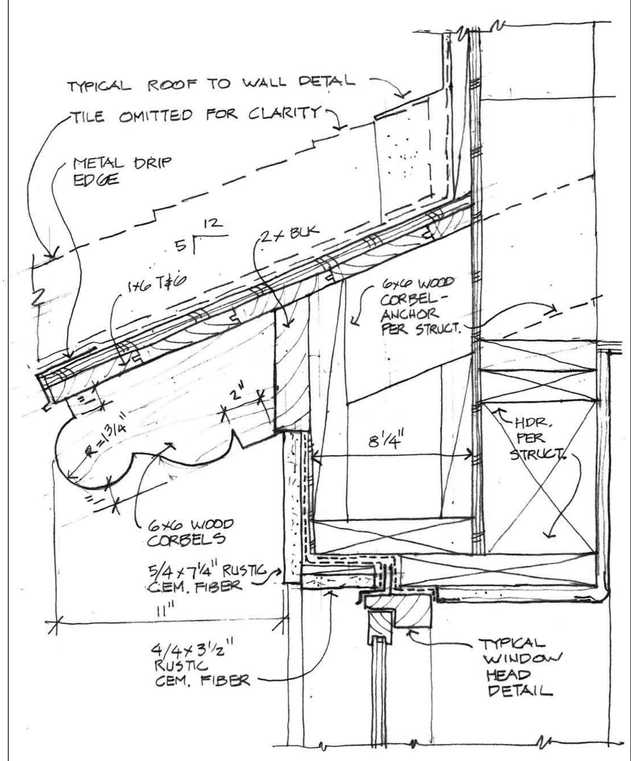

8 Bay Window Head

SCALE: 3" = 1'-0"

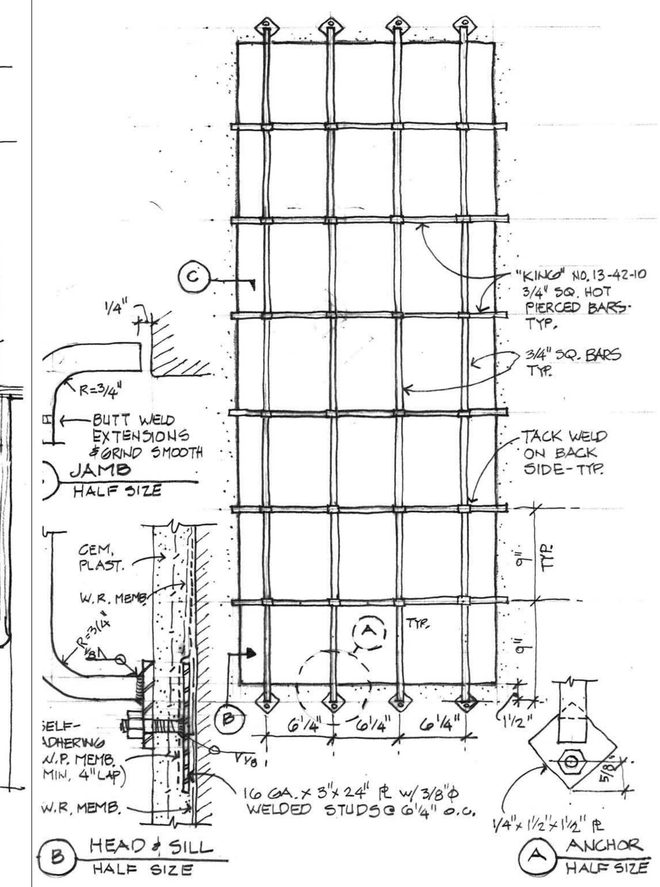

3 Open Grill

SCALE1 1/2" = 1'-0"

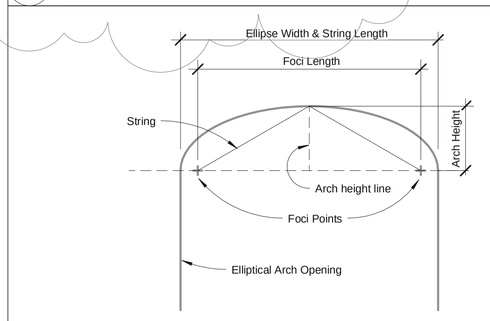

1. Locate foci points with nails or tacks on plywood template.
2. Draw a line the length of the Arch Height that is perpendicular to the midpoint between the foci.
3. Tie a string between each foci point. Plastic cord works well because it does not stretch.
4. String Length = Opening Width
5. Using a pencil, keep the string taught and trace the shape of the ellipse.

24 Elliptical Arch Layout

SCALE: 1/2" = 1'-0"

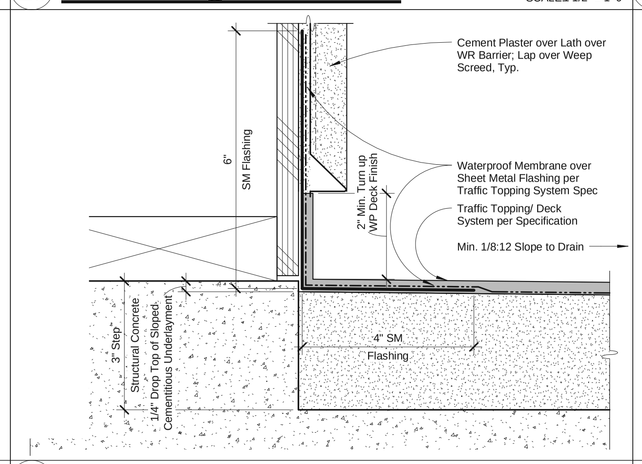

19 Deck Drain @ Conc Podium

SCALE1 1/2" = 1'-0"

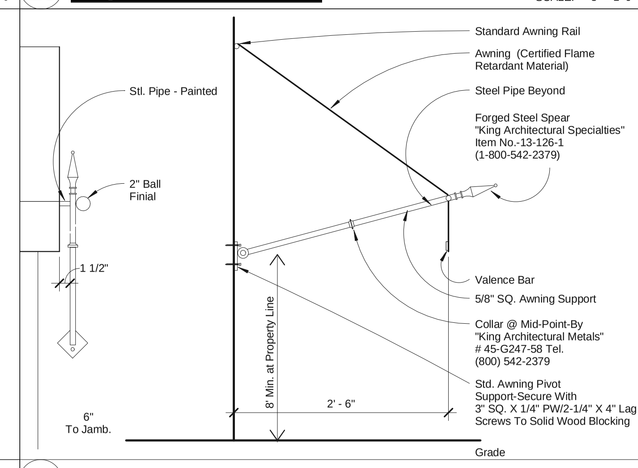

14 Awning Detail

SCALE: 1" = 1'-0"

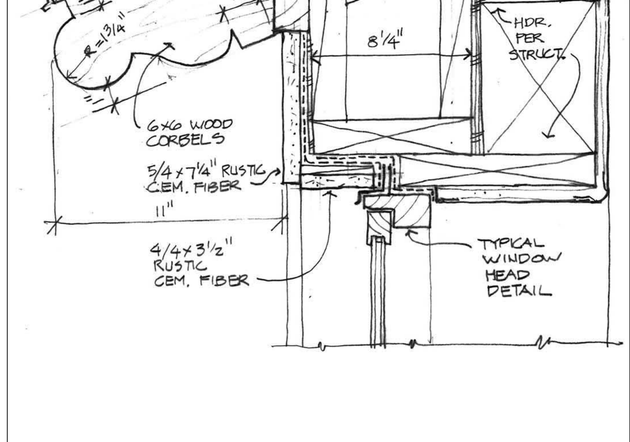

10 Bay Window Sill

SCALE: 3" = 1'-0"

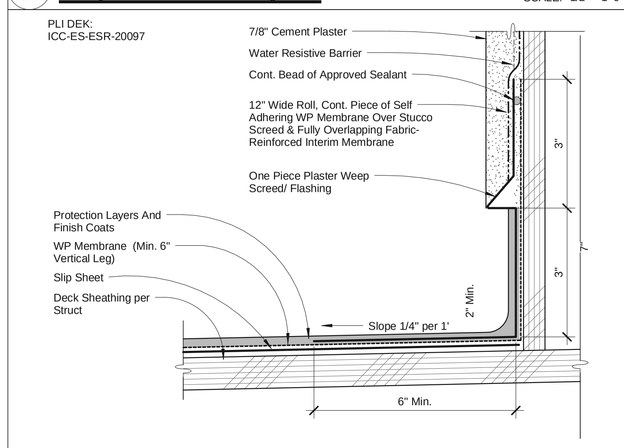

2 Deck Edge to Wall

SCALE: 6" = 1'-0"

15 Waterproof Connection Detail

SCALE: 6" = 1'-0"

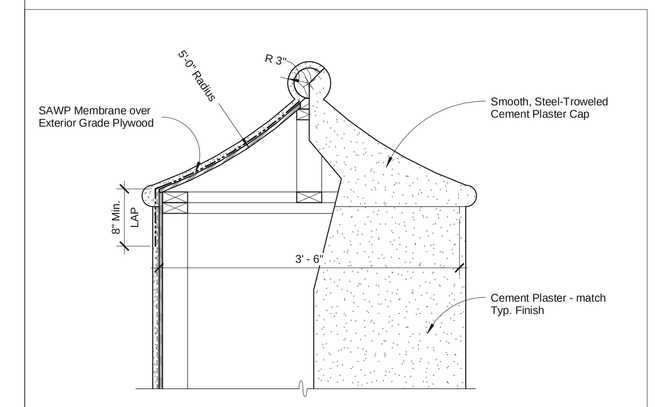

20 Podium Deck to Wall, Typ.

SCALE: 6" = 1'-0"

5 Finial at Parapet Wall

SCALE: 1" = 1'-0"

Project Name:

Jardin de las Rosas

Haley & Salsipuedes St.
Santa Barbara, CA

Peoples' Self-Help Housing

Consultant:

Stamp:

PRELIMINARY
NOT FOR CONSTRUCTION

Review after Final 03.31.2014

Revisions:

1	Revision 1	Date 1

Sheet Title:

Exterior Details

Sheet No.:

A8.30

3/31/2014 8:48:20 PM C:\Users\besangster\Documents\PSHH - Salsipuedes Central_besangster.rvt

© Copyright - Peikert + RRM Design Group

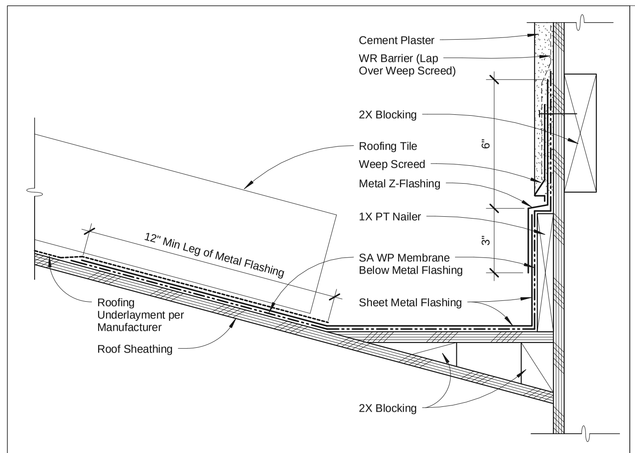

16 Cricket Detail

SCALE: 3" = 1'-0"

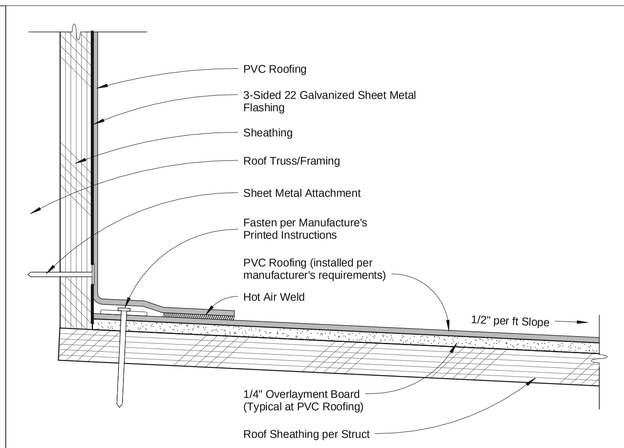

11 Wall To PVC

SCALE: 6" = 1'-0"

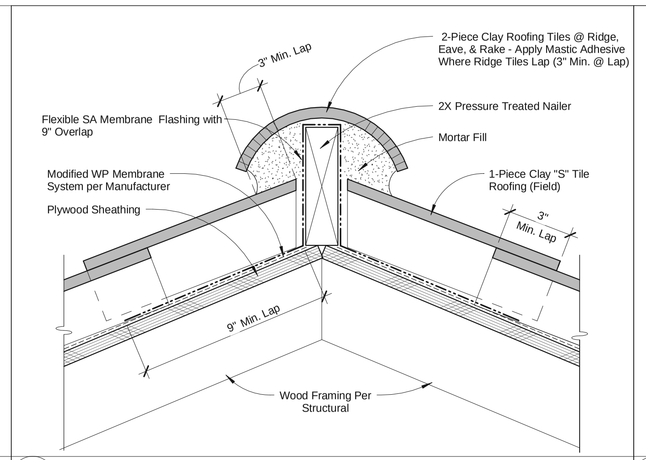

6 Ridge & Hip Detail

SCALE: 3" = 1'-0"

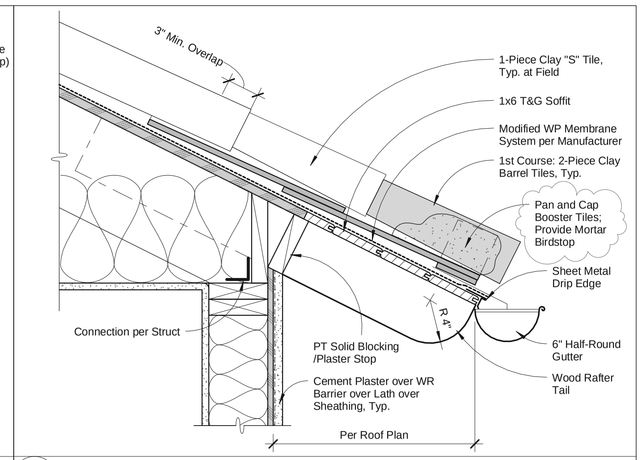

1 Eave Overhang Detail

SCALE1 1/2" = 1'-0"

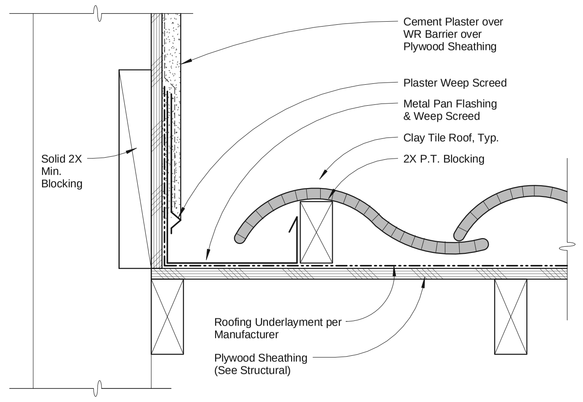

22 Rake @ Wall Detail

SCALE: 3" = 1'-0"

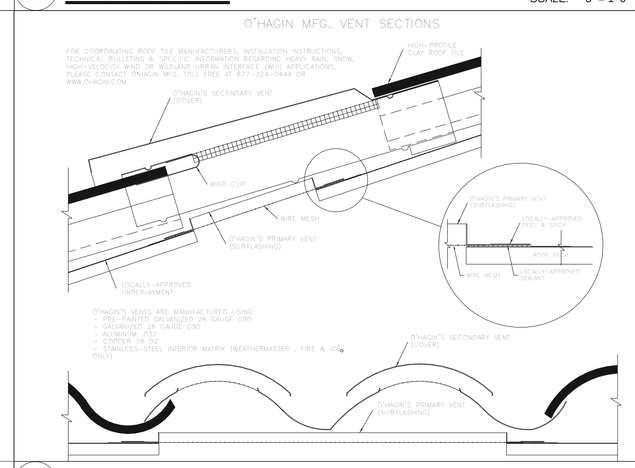

17 Roof Vents @ Clay 'S' Tile

SCALE: 3" = 1'-0"

Note: Attach PVC roofing per manufacturer's printed installation instructions. PVC Roofing must not come in contact with asphalt products.

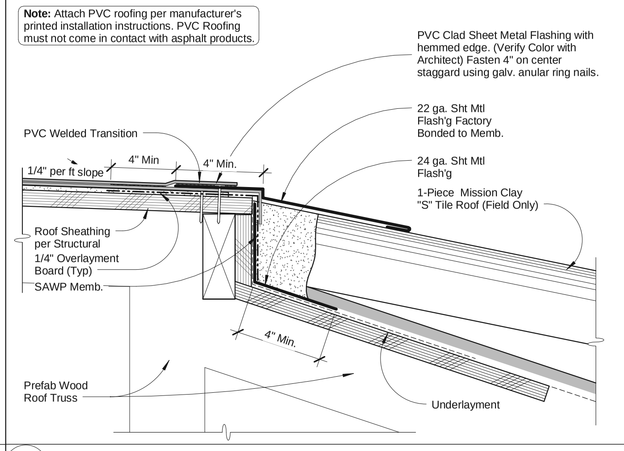

12 PVC to Mission Tile

SCALE: 3" = 1'-0"

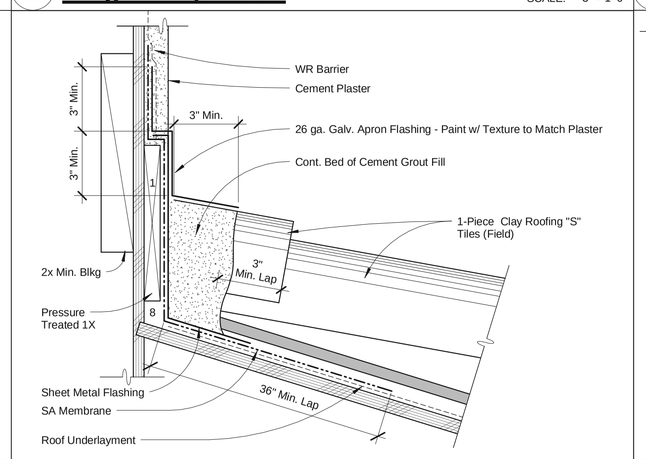

7 Roof To Wall Detail

SCALE: 3" = 1'-0"

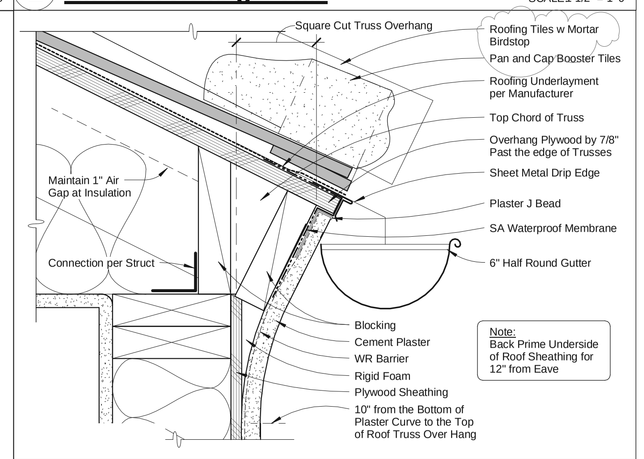

2 Eave Detail

SCALE: 3" = 1'-0"

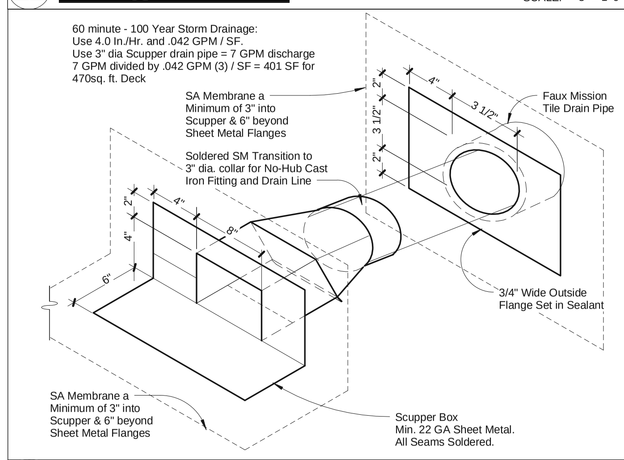

23 Scupper Box

SCALE: 1 : 6

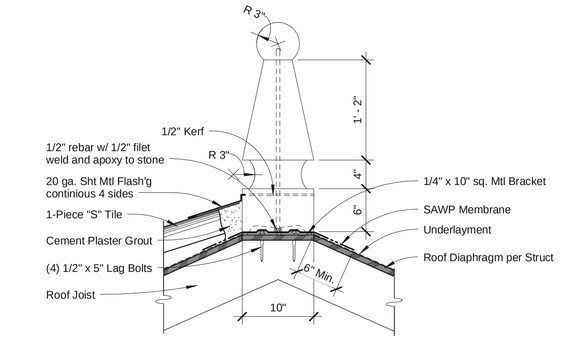

18 Roof Finial Detail

SCALE: 1" = 1'-0"

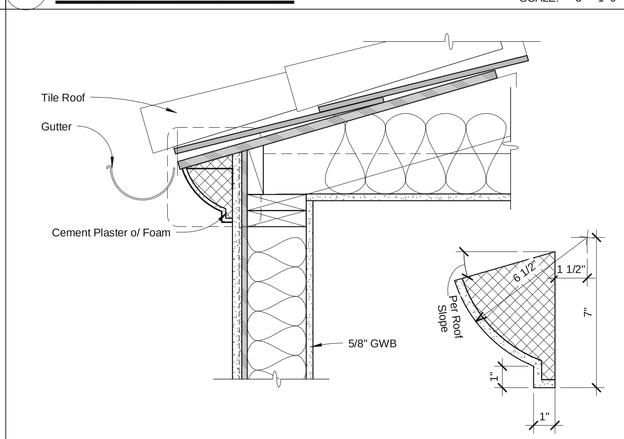

13 Eave Detail 3

SCALE1 1/2" = 1'-0"

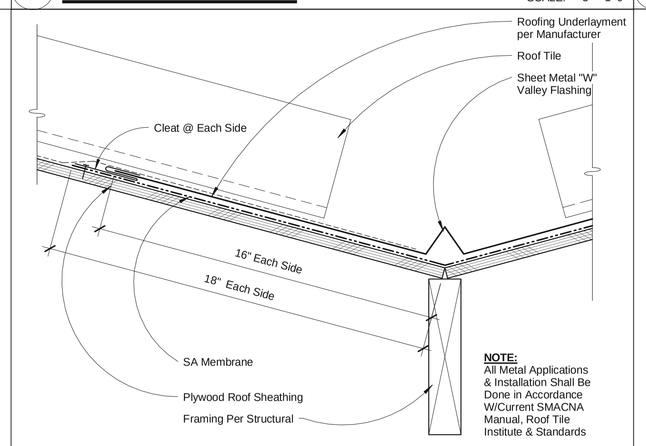

8 Tile Roof Valley Detail

SCALE: 3" = 1'-0"

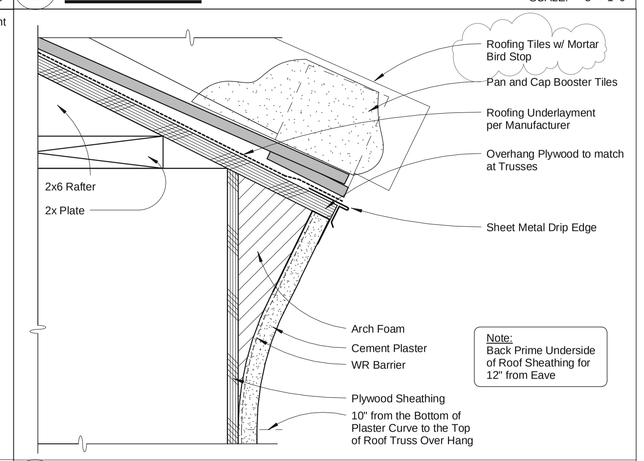

3 Eave Detail 2

SCALE: 3" = 1'-0"

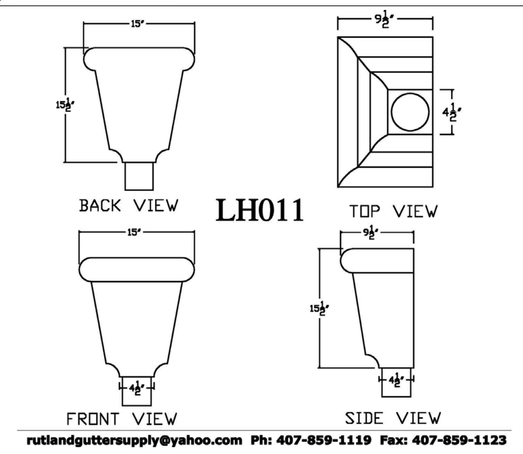

24 Leaderhead

SCALE: 3" = 1'-0"

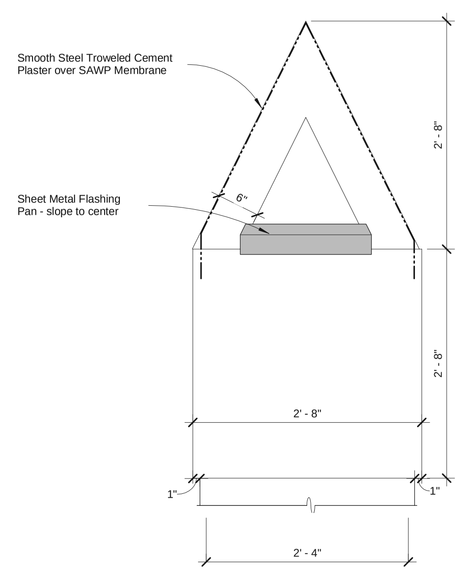

20 Chimney 3

SCALE: 1" = 1'-0"

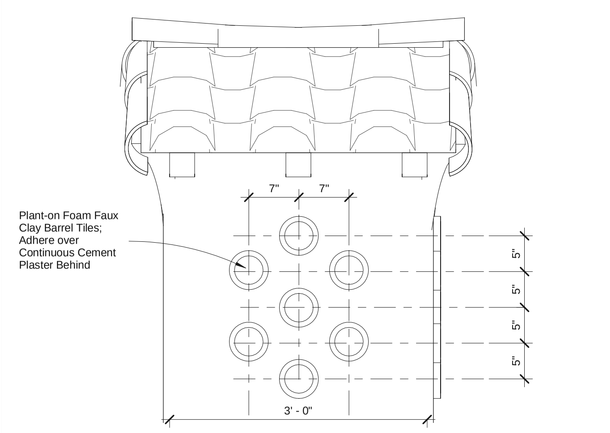

14 Chimney 2

SCALE: 1" = 1'-0"

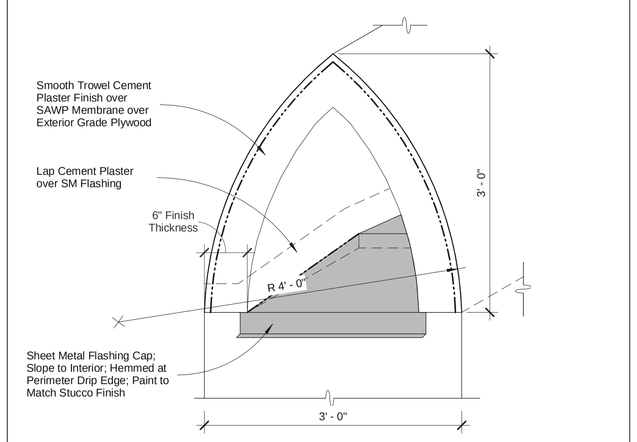

9 Chimney 4

SCALE: 1" = 1'-0"

4 Rake With Plaster Sweep Detail

SCALE: 3" = 1'-0"

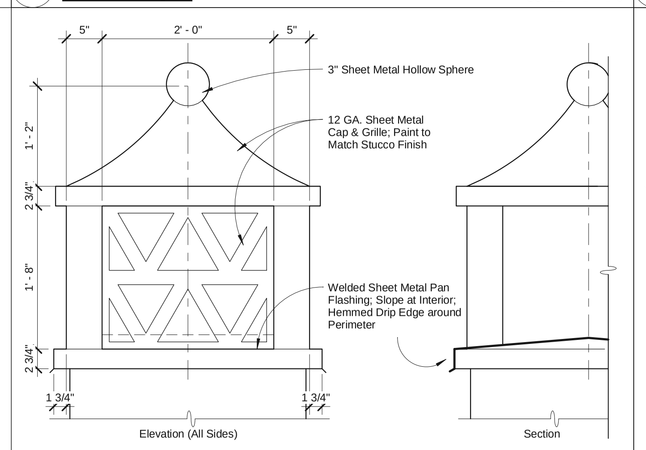

10 Chimney 1

SCALE: 1" = 1'-0"

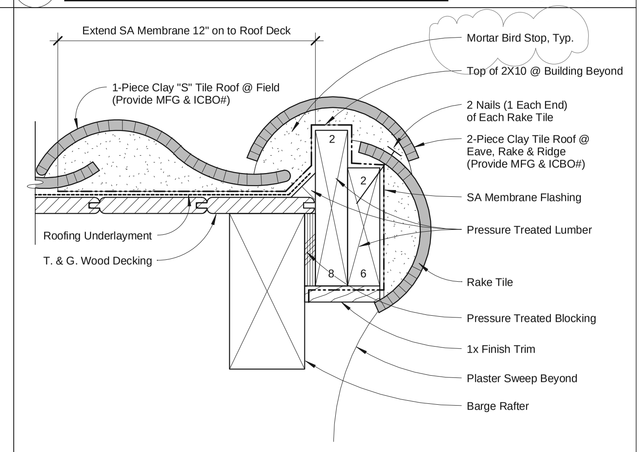

5 Rake @ Overhang Detail

SCALE: 3" = 1'-0"

peikert + rrmdesigngroup

10 E. Figueroa St., Suite 1
Santa Barbara, CA 93101

Tel: 805.963.8283
Fax: 805.963.8184
www.rrmdesign.com

Project Name:

Jardin de las Rosas

Haley & Salsipuedes St.
Santa Barbara, CA

Peoples' Self-Help Housing

Consultant:

Stamp:

PRELIMINARY NOT FOR CONSTRUCTION

Review after Final 03.31.2014

Revisions:

1	Revision 1	Date 1

Sheet Title:

Roof Details

Sheet No.:

A8.40

3/31/2014 8:48:24 PM C:\Users\besangster\Documents\PSHH - Salsipuedes Central_besangster.rvt

© Copyright - Peikert + RRM Design Group

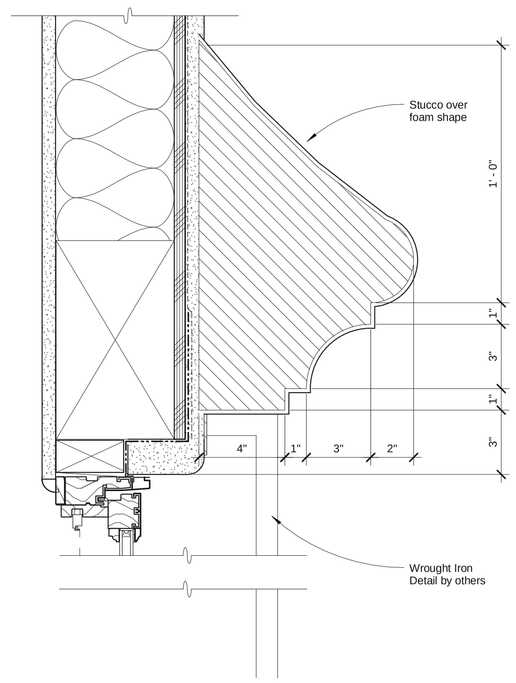

3 Foam Shape @ Window Header

SCALE: 3" = 1'-0"

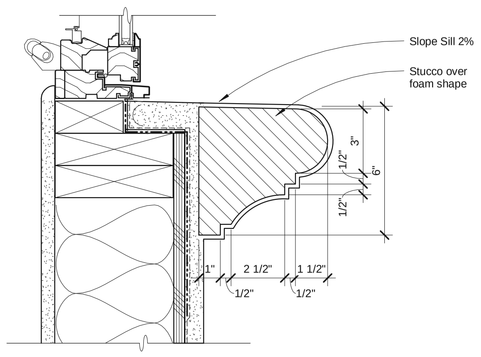

2 Vent Window Sill

SCALE: 3" = 1'-0"

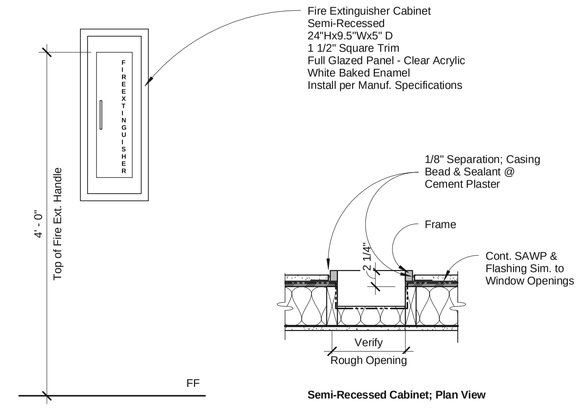

Semi-Recessed Cabinet; Plan View

11 Fire Extinguisher Cabinet

SCALE: 1" = 1'-0"

Head (Side Jamb Similar)

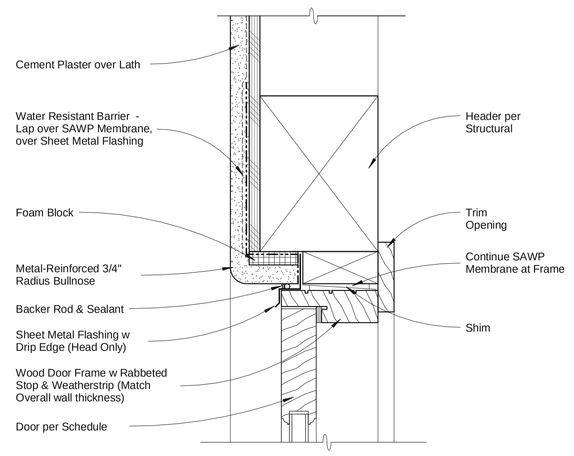

Sill

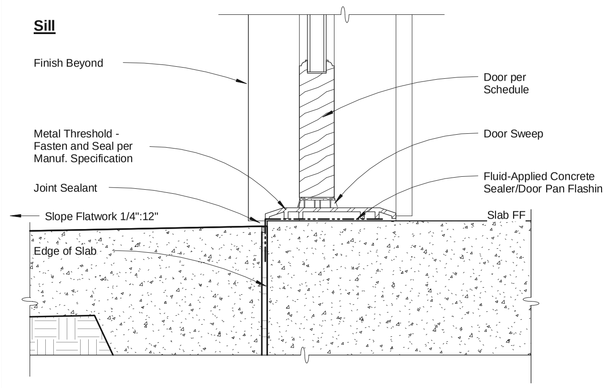

13 Out-swing Exterior Door (Utility)

SCALE: 3" = 1'-0"

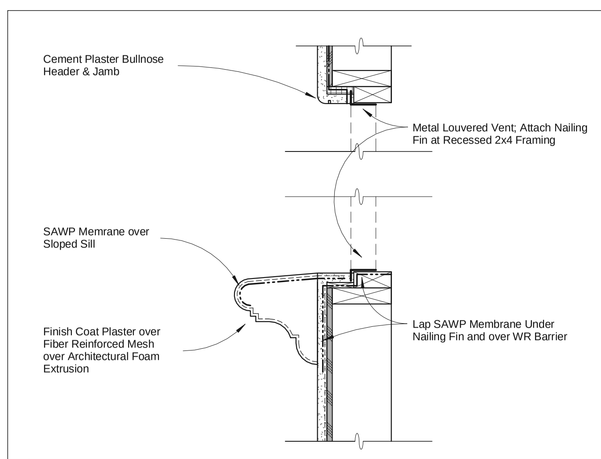

5 Louvered Vent Trim

SCALE1 1/2" = 1'-0"

Head

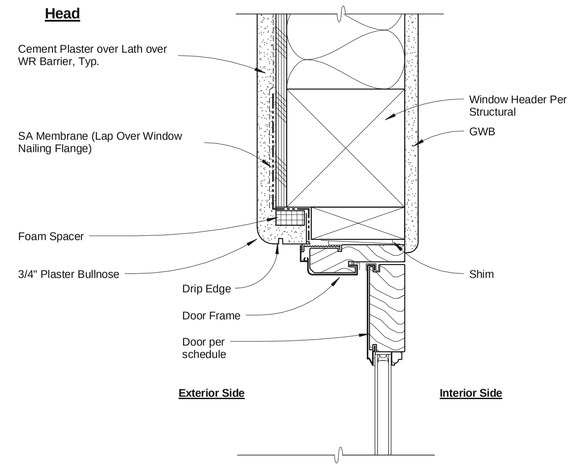

Jamb

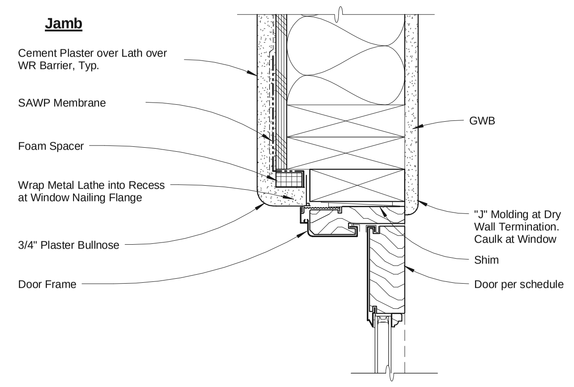

Threshold at Wood-Framed Floors

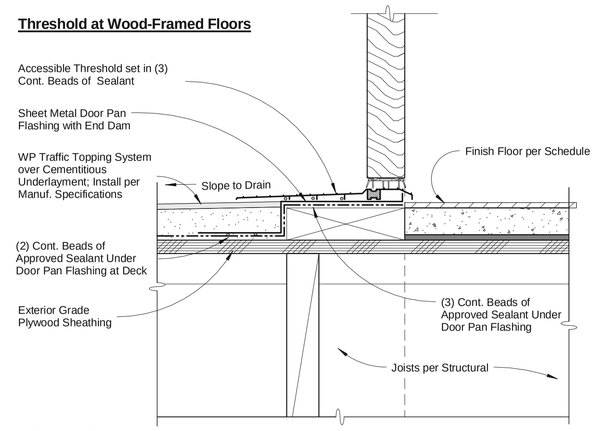

IMPORTANT: Consult Waterproofing System Manufacturer For Additional Information Regarding Plywood Sheathing, Framing, Blocking & Sheet Metal Installation

Threshold at Concrete Podium Floors

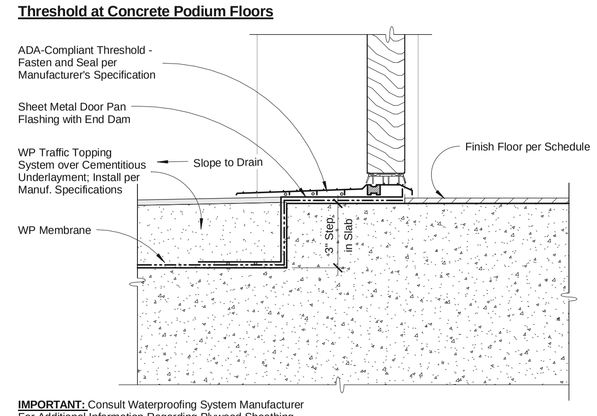

IMPORTANT: Consult Waterproofing System Manufacturer For Additional Information Regarding Plywood Sheathing, Framing, Blocking & Sheet Metal Installation

Threshold at Ground-Level Concrete Floors

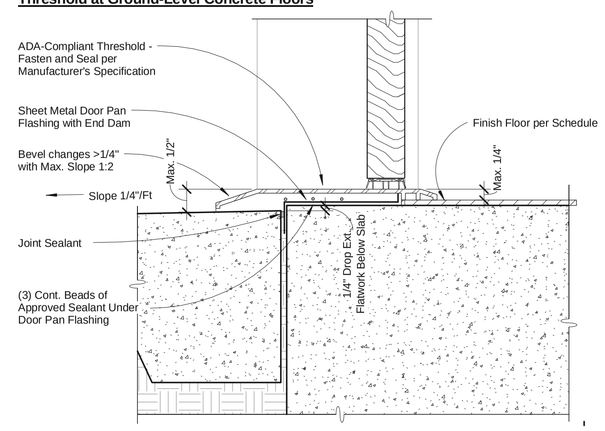

10 In-Swing Exterior Door

SCALE: 3" = 1'-0"

Window Head

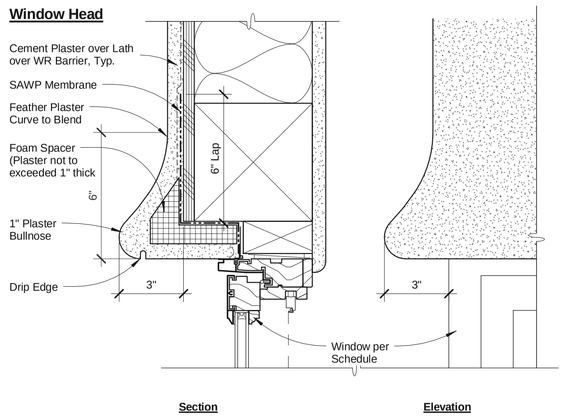

1 Window Eyebrow Detail

SCALE: 3" = 1'-0"

Head

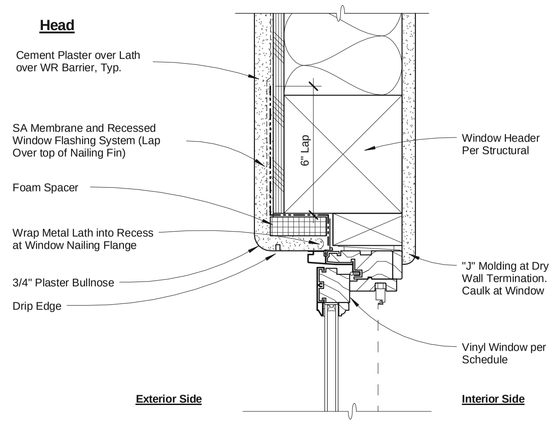

Jamb

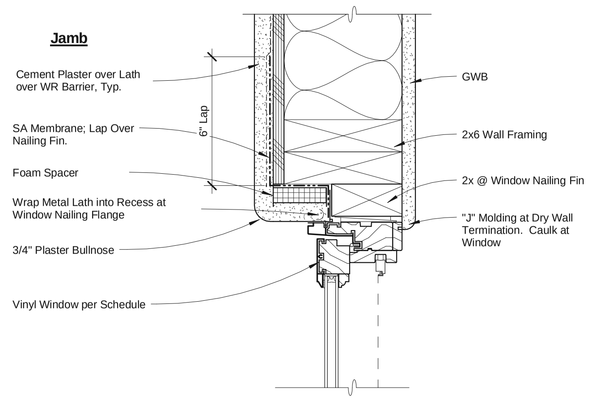

Sill

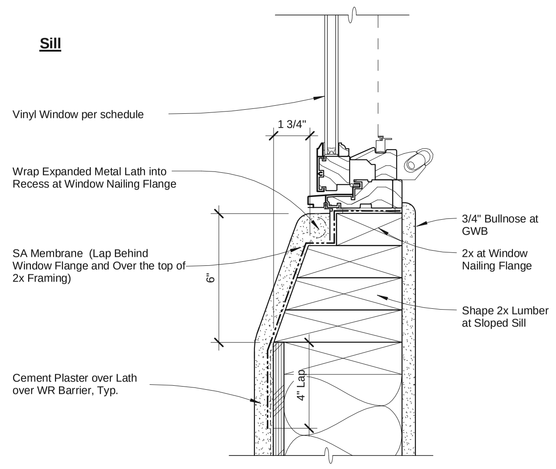

4 Window Details, Typical

SCALE: 3" = 1'-0"

peikert + rrmdesigngroup

10 E. Figueroa St., Suite 1
Santa Barbara, CA 93101

Tel: 805.963.8283
Fax: 805.963.8184
www.rrmdesign.com

Project Name:

Jardin de las Rosas

Haley & Salsipuedes St.
Santa Barbara, CA

Peoples' Self-Help Housing

Consultant:

Stamp:

PRELIMINARY
NOT FOR CONSTRUCTION

Review after Final 03.31.2014

Revisions:

Sheet Title:

Door & Window Details

Sheet No.:

A8.50